Peter Zenni

From: Roberts, Timothy <Timothy.Roberts@cbh.com.au>
Sent: Monday, 1 August 2022 4:46 PM
To: Peter Zenni
Subject: Application for Development Approval - Additions to existing Grain Handling & Storage Facility - Lot 503 on Deposited Plan 53957, Merredin
Attachments: Application for Planning Approval - Merredin.pdf; Addition to Grain Handling and Storage Facility - Lot 503 on Deposited Plan 53957, Merredin.pdf; Site Plan - Merredin.pdf; Standard Elevation Drawings.pdf; Standard DOG Elevation Plan.pdf; Traffic Impact Statement.pdf; Stormwater Management Strategy.pdf

Follow Up Flag: Follow up
Flag Status: Flagged

Good Afternoon,

Please find attached CBH's development application for additions to an existing grain handling and storage facility located at Lot 503 on Deposited Plan 53957, Merredin.

The following information is attached in support of the application:

1. Completed Application for Development Approval Form
2. Planning Report
3. Site Plan - Merredin
4. Standard Elevation Drawings
5. Standard DOG Elevation Plan
6. Traffic Impact Statement
7. Stormwater Management Strategy

Previous discussions identified that today (01st August) was the last day we could lodge the development application if we wanted to get to the August Council meeting for determination. If I can help in any way further with assisting the Shire to progress the application towards the August OCM, please let me know.

Can could please send me an invoice so I can arrange payment of the prescribed development application fee.

Should you required any further information please do not hesitate to contact me via return email or on the details provided below.

Thanks,
Tim

Timothy Roberts
Specialist Regulatory Approvals – Government & Industry Relations

Level 6 / 240 St Georges Terrace, Perth WA 6000
T 08 9216 6061 (direct)
E timothy.roberts@cbh.com.au

SHIRE OF MERREDIN
HEART OF THE WHEATBELT

APPLICATION FOR PLANNING APPROVAL

LOCAL PLANNING SCHEME No. 6 - SCHEDULE 6 - (CLAUSE. 9.1.1)

OWNERS DETAILS				
Name/s:	Co-operative Bulk Handling Ltd			
Address:	Level 6 240 St Georges Terrace Perth WA			
				Post Code: 6000
Phone work:	08 9216 6061	Phone home:		Fax:
Mobile:		Email:		
Signature:			Date:	01/08/2022
Signature:			Date:	
NB: The owner/s signature/s are required for your application to be processed.				

APPLICANTS DETAILS			
Name: As above			
Address:			
			Post Code:
Contact person for correspondence:			
Phone work:		Phone home:	Fax:
Mobile:		Email:	
Signature:		Date:	

PROPERTY DETAILS					
Lot No:	503	House/Street No:		Location No:	
Street name:	Goldfields Road				
Suburb:	Merredin			Post Code:	6415
Nearest street intersection:	Goldfields Road & Crooks Road				
Diagram or plan:	53957	Certificate of title:	2667	Folio:	179
Title encumbrances (e.g. easements, restrictive covenants)					

PROPOSED OR EXISTING BUILDING/LAND USE	
Description of proposed development and/or land use:	- 1 x 1.8m high | 340m x 35m | 44,540 tonnes OBH and 1 x 1.8m high | 340m x 35m | 39,300 tonnes OBH; - 2 x 500 tph drive-over-grid stackers, internal access roads and associated drainge works.
Nature of any existing buildings and/or land use:	Grain Handling & Storage Facility
Approximate cost of proposed development:	$ 1,200,000
Estimated time of completion:	4 weeks following approval

OFFICE USE ONLY	
Acceptance Officer's initials :	*Date received:*
Local government reference no:	

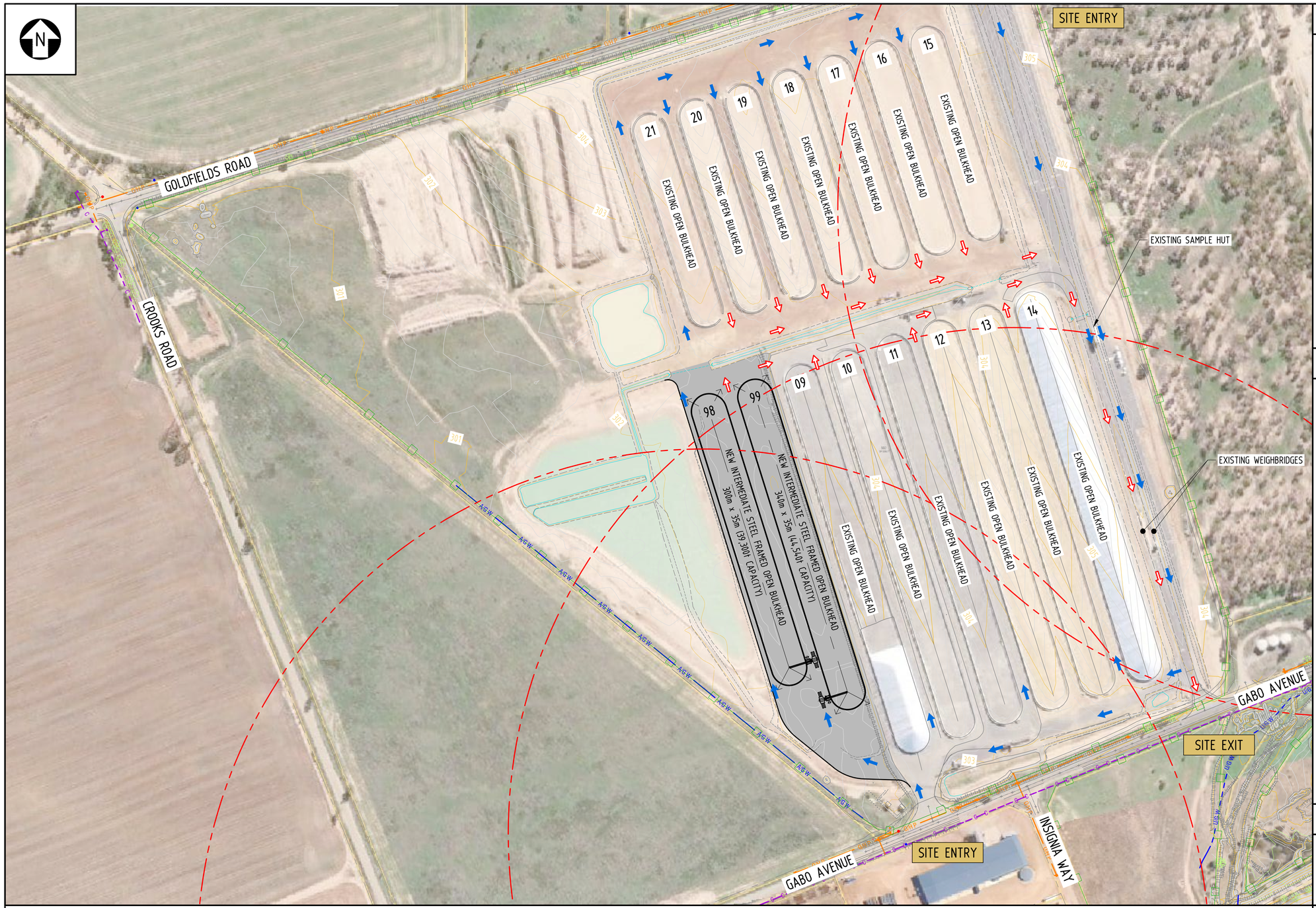

PLAN
1:2000

DRAWING LEGEND

- TRAFFIC MOVEMENTS - TRUCKS FULL
- TRAFFIC MOVEMENTS - TRUCKS EMPTY
- LOT BOUNDARIES
- CBH SITE BOUNDARY
- STORMWATER CULVERT (WITH HEADWALLS)
- O/H P — OVERHEAD POWER LINES
- U/G P — UNDERGROUND POWER CABLES
- C — UNDERGROUND COMMS CABLES
- A/G W — ABOVE GROUND WATER PIPES
- U/G W — UNDERGROUND WATER PIPES
- PROPOSED OPEN DRAINAGE
- EPA INDUSTRIAL/SENSITIVE LAND USE SEPARATION DISTANCE - 500m RADIUS

STORAGE CAPACITIES

EXISTING SITE STORAGE		
ORIGINAL SITE (NOT SHOWN)		465,800t
LOW STEEL FRAME OBH	(09)	40,000t
LOW STEEL FRAME OBH	(10)	40,000t
LOW STEEL FRAME OBH	(11)	40,000t
LOW STEEL FRAME OBH	(12)	40,000t
LOW STEEL FRAME OBH	(13)	40,000t
LOW STEEL FRAME OBH	(14)	40,000t
LOW STEEL FRAME OBH (TEMPORARY)	(15)	22,000t
LOW STEEL FRAME OBH (TEMPORARY)	(16)	22,000t
LOW STEEL FRAME OBH (TEMPORARY)	(17)	22,000t
LOW STEEL FRAME OBH (TEMPORARY)	(18)	22,000t
LOW STEEL FRAME OBH (TEMPORARY)	(19)	22,000t
LOW STEEL FRAME OBH (TEMPORARY)	(20)	22,000t
LOW STEEL FRAME OBH (TEMPORARY)	(21)	22,000t
TOTAL EXISTING STORAGE		859,800t

PROPOSED SITE STORAGE		
INT (1.8m) STEEL FRAME OBH	(98)	39,300t
INT (1.8m) STEEL FRAME OBH	(99)	44,540t
TOTAL PROPOSED STORAGE		83,840t

TOTAL SITE STORAGE	943,640t
TOTAL INCREASE IN STORAGE	83,840t

HATCHING LEGEND

AREA OF NEW WORKS 38,700m²

PRELIMINARY ISSUE
DO NOT USE FOR CONSTRUCTION
DATE 04.07.22

1:2000 @ A1
1:4000 @ A3
0 20 40 60 80 100 120 140 160 180 200 m

DO NOT SCALE FROM THIS DRAWING

CBHGROUP
ABN 29 256 604 947

CBH GROUP
LEVEL 6
240 ST GEORGE'S TERRACE
PERTH W.A. 6000
PH (08) 9237 9600
FAX (08) 9322 3942

REF DRAWING No.	REFERENCE DRAWING TITLE	REV	DATE	REVISION DESCRIPTION	BY	CHK'D	APP'D
-	-	A	04.07.22	ISSUED AS CHECK PRINT AND FOR REVIEW	PF		

SCALE 1:2000
SHEET A1
PROJECT
CONTRACT No

DRAWN	P. Forrest	28.06.22
CHECKED		
DESIGNED		
DESIGN APPR		
PROJECT APPR		

TITLE
MERREDIN
PRE-FEASIBILITY STUDY
2022 EMERGENCY STORAGE - WEST SITE
CONCEPTUAL LAYOUT - OPTION 1

DRG No 438-ENG-CI-DCO-0001 | SHEET 1 OF 1 | REV. A

INSTALLATION NOTES:

1. OBH LENGTH AND WIDTH DIMENSIONS ARE SPECIFIED FROM REAR PIN TO THE OPPOSITE REAR PIN. REFER PROJECT SPECIFIC SITE LAYOUT DRAWING FOR DIMENSIONS.
2. TOLERANCE FOR OVERALL OBH WIDTH AND LENGTH ARE +/- 50MM. TOLERANCE FOR FRAME SPACING +/- 10mm.
3. NOTE DIFFERENT ANCHORING DETAILS FOR DOOR/GATES AND FRAMES EITHER SIDE OF BULKHEAD OPENINGS. REFER ANCHORING DETAILS ON SHEETS 2 AND 3.
4. NOTE ADDITIONAL Z-CAPPING, WOOD AND CLADDING TRIMMING REQUIRED AT GATE JOINS. REFER SHEETS 6 AND 8 FOR DETAILS.
5. TYPICAL CLADDING OVERLAP IS 200mm, CENTERERED OVER THE CENTERLINE OF THE STRUT, FOR ALL JOINS EXCEPT AT GATE AND DOOR JOINS. REFER SHEETS 6 - 9.
6. ALL Z-CAPPING MUST BE ALIGNED AS ACCURATELY AS POSSIBLE. ANY MISALIGNMENT IN Z-CAPPING WILL TEAR THE OBH TARP. REFER NOTES ON SHEETS 6, 8 AND 9 FOR TOLERANCES.
7. FOUR PERSONNEL ACCESS DOORS TO BE INSTALLED AS SHOWN. TWO INSTALLED EACH SIDE AT MIDPOINTS BETWEEN END OF OBH AND CENTRE BULKHEAD OPENING.
8. THREE FUMIGATION T-PIECES TO BE INSTALLED ON SAME SIDE AS ELECTRICAL CONNECTION. REFER SHEETS 1 AND 7 FOR INSTALLATION DETAILS. REFER CBH DRAWING S119-ENG-ME-DER-0001 FOR VENDOR DRAWING OF T-PIECE.
9. DRAWING DEPICTS TYPICAL OBH SIZE OF 35M WIDE BY 300M LONG AND ASSOCIATED STANDARDISED REQUIRED QUANTITIES OF FUMIGATION TEES, PERSONAL ACCESS DOORS AND FRONT END LOADER ACCESS GATES. SITE SPECIFIC OBH REQUIREMENTS SHALL BE CONFIRMED WITH THE NOMINATED CBH REPRESENTATIVE PRIOR TO CONSTRUCTION.
10. BULKHEAD CONTENTS ARE INTENDED TO BE FUMIGATED IN A SEALED ENVIRONMENT BY USE OF WALL CANVICON AND OVER STACK TARPS - THE CONTRACTOR SHALL MINIMISE ANY MEANS WHICH COULD DETRIMENTALLY AFFECT THE SEALING CAPABILITY, SUCH AS SHARP EDGES THAT COULD CUT TARP.

PARTS LIST (PER UNIT)

ITEM No	DESCRIPTION	WIDTH	LENGTH	QTY	CBH OR SUPPLIER PART No	PROCESS	SAP Code	MASS Kg	TO DETAIL
1	FRONT END LOADER ACCESS GATE			REFER NOTE	S119-ENG-ST-ASY-0034	FIELD FIT	N/A	184.4	Yes
2	PERSONNEL ACCESS DOOR			REFER NOTE	S119-ENG-ST-ASY-0017	FITTING	N/A	17.1	Yes
3	STRAIGHT PIN STRUT ASSEMBLY			REFER NOTE	S119-ENG-ST-ASY-0004	FITTING	N/A	36.4	Yes
4	SPIRAL PIN STRUT ASSEMBLY			REFER NOTE	S119-ENG-ST-ASY-0005	FITTING	N/A	36.2	Yes
5	CUSTOM ORB ZINC ALUME 0.42mm BMT 550 MPa MIN. (YIELD)	762	3200	REFER NOTE	S119-ENG-ST-PRT-0010	FITTING	DREQ	1.3	No
6	DIA 20 STRAIGHT PIN ANCHOR		420	REFER NOTE	S-014-A0000	FIELD KIT	DREQ	1.1	Yes
7	SPIRAL PIN ANCHOR		300	REFER NOTE	S119-ENG-ST-DER-0052	FITTING	DREQ	0.8	Yes
8	Z CAPPING 1.6PL PGI	300	3000	REFER NOTE	S119-ENG-ST-PRT-0011	FAB SHEET	108015	11.4	Yes
9	TIMBER SAWN KARRI STRUC3 75mmx50mmx3m	75	3000	REFER NOTE	S119-ENG-ST-PRT-0014	FITTING	108594	6.2	No
10	TARP CLAMP 6PL	130	257	REFER NOTE	S119-ENG-ST-PRT-0012	FAB PROFILE	107901	1.6	Yes
11	FUMIGATION TEE PIECE			REFER NOTE	S119-ENG-ME-DER-0001	FITTING	N/A		Yes
12	RUBBER STRIP 450mm WIDE, 8mm THICK	450	2050	REFER NOTE	S119-ENG-ST-PRT-0048	FIELD KIT	DREQ	6.9	No
13	M10 x 120 GALV BOLT GR8.8 (50mm THREAD Min.)			REFER NOTE		FIELD KIT	DREQ	0.1	No
14	M10 GALV. NUT			REFER NOTE		FIELD KIT	DREQ	0.0	No
15	M10 GALV FW			REFER NOTE		FIELD KIT	DREQ	0.0	No
16	METAL TEK SCREW, HEX HEAD, 14g-20x22mm, CLASS 4, WITH SEAL			REFER NOTE		FIELD KIT	DREQ	0.0	No
17	METAL TEK SCREW, HEX HEAD, 14g-20x45mm, CLASS 4, WITH SEAL			REFER NOTE		FIELD KIT	DREQ		No
18	NOVALAST LTM 151			REFER NOTE		FIELD KIT	DREQ		No
19	BOSTIK SEAL AND FLEX 1			REFER NOTE		FIELD KIT	DREQ		No

** QTY NOTE: TO CALCULATE EXACT ORDER QUANTITYS, REFER TO THE 'CBH OBH PROCUREMENT CALCULATOR'-S119-ENG-ST-CAL-0001

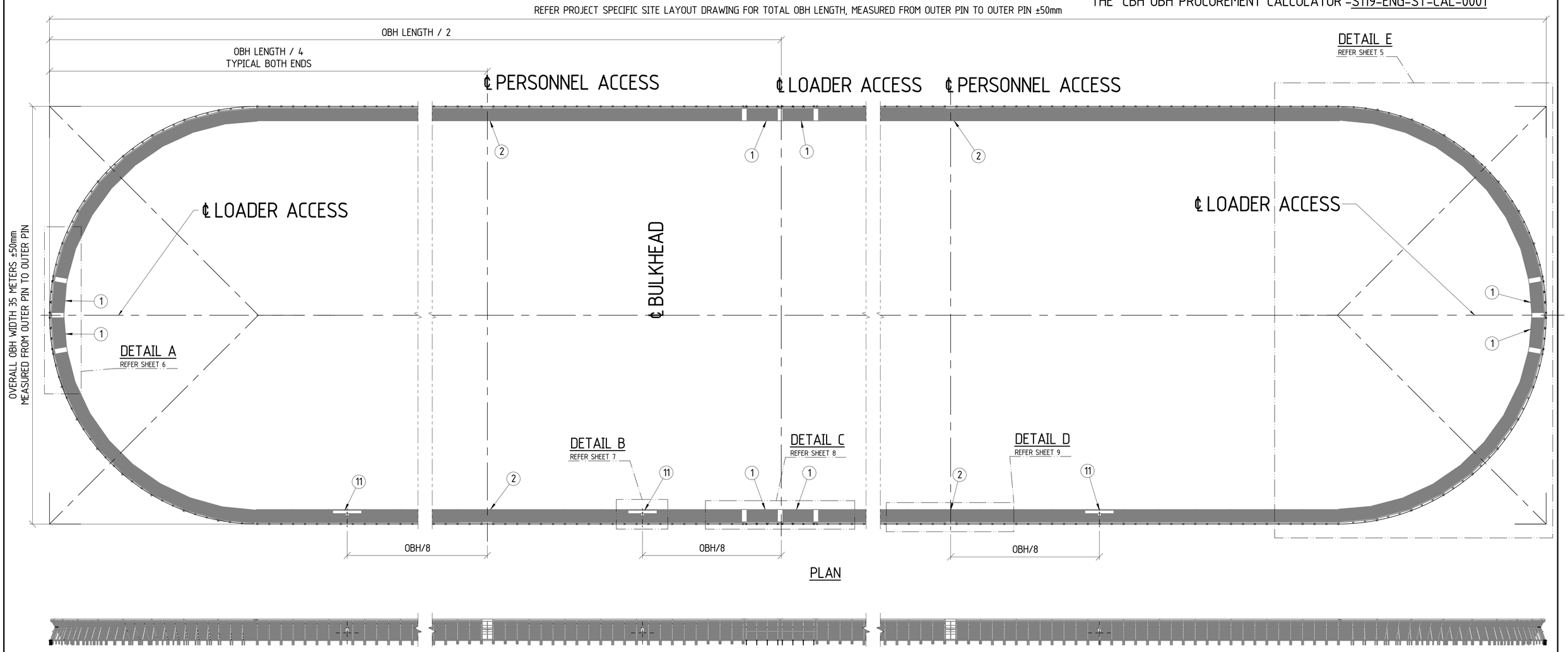

S119-ENG-ST-DGA-0003

CBH GROUP HEAD OFFICE
LEVEL 6, 240 ST GEORGES TERRACE,
PERTH W.A 6000
PH (08) 9237 9600 FAX (08) 9322 3942

DO NOT SCALE FROM THIS DRAWING

REF DRG No.	REFERENCE DRAWING TITLE

REV	DATE	REVISIONS	BY	CHK	APP
0	10/06/2020	COPIED FROM S-119, ISSUED FOR CONSTRUCTION	SCR	LS	NH

DRAWN	SCR	10/06/2020
CHECKED	LS	10/06/2020
ENGINEER	BC	11/06/2020
APPROVED	NH	11/06/2020

DRAWING TITLE
1.8m OPEN BULK HEAD
GENERAL ARRANGEMENT
OVERALL LAYOUT

SITE: VARIOUS
SIZE: A1
PROJECT: STANDARD
DRAWING No: S119-ENG-ST-DGA-0003
SHEET: 1 OF 9
REV.: 0

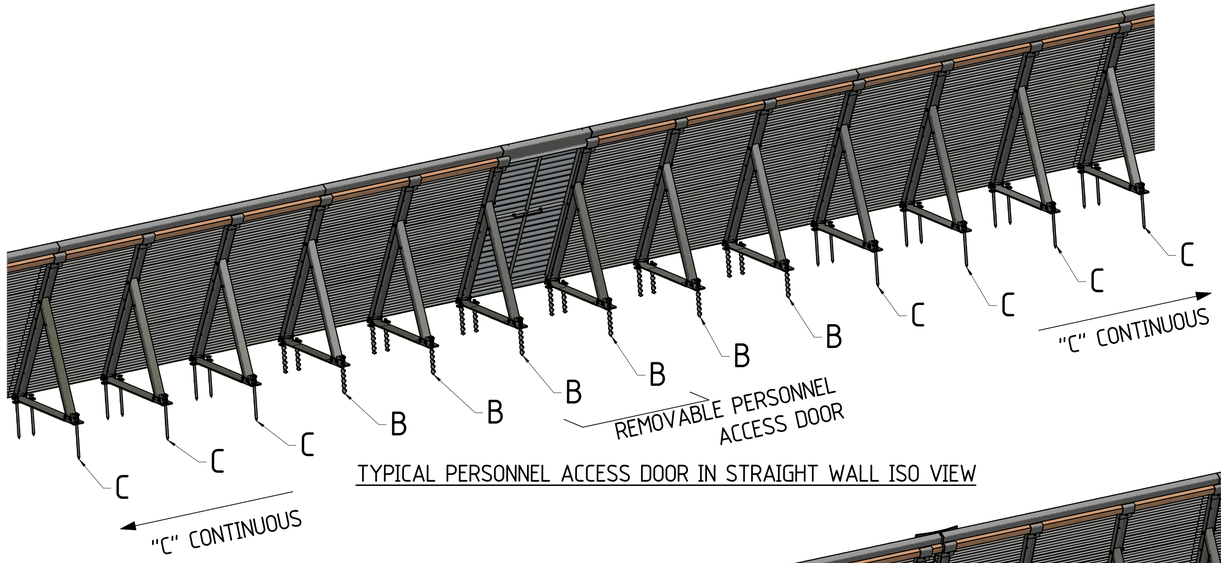

TYPICAL PERSONNEL ACCESS DOOR IN STRAIGHT WALL ISO VIEW

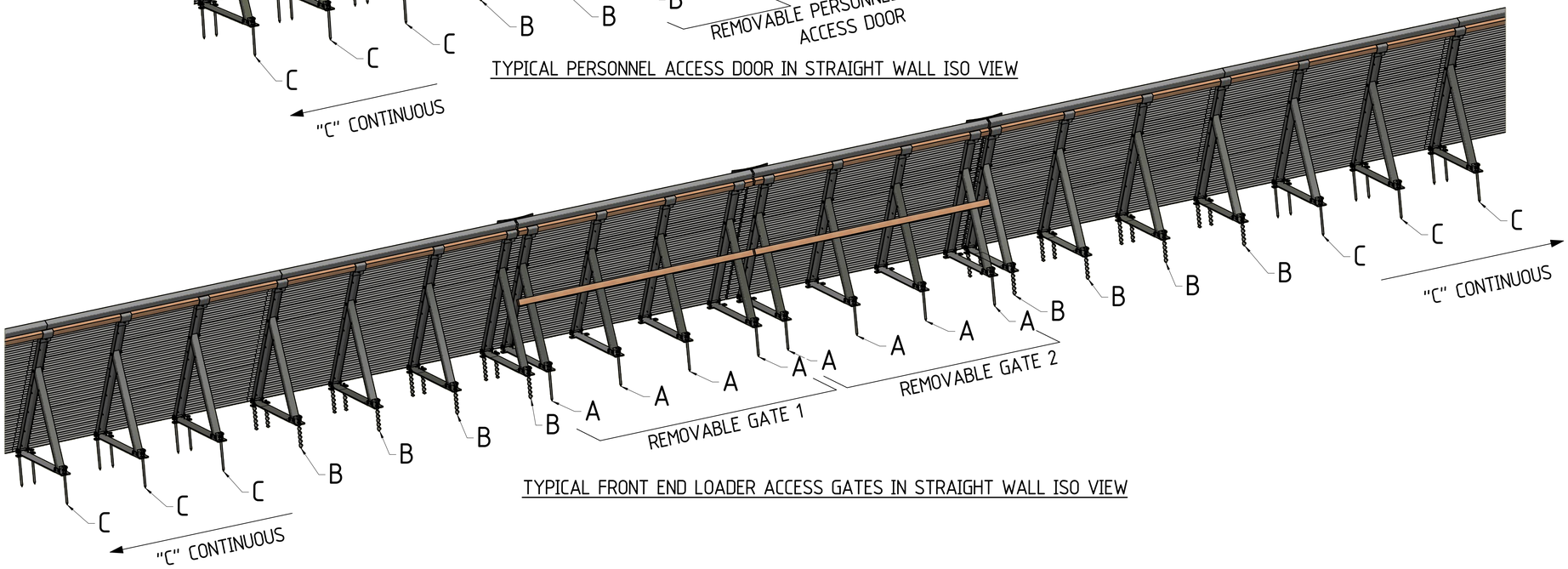

TYPICAL FRONT END LOADER ACCESS GATES IN STRAIGHT WALL ISO VIEW

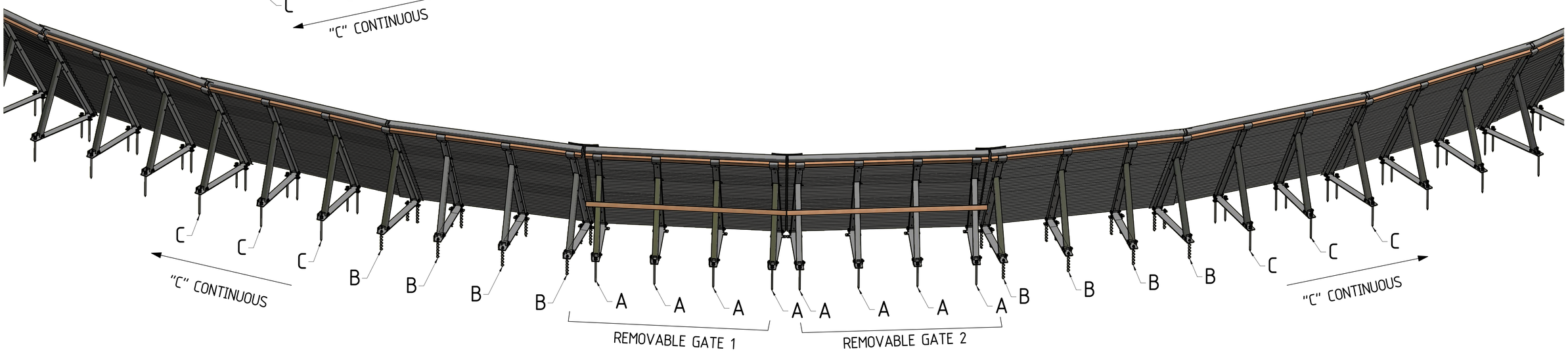

TYPICAL FRONT END LOADER ACCESS GATES IN CURVED WALL ISO VIEW

CBHGROUP

CBH GROUP HEAD OFFICE
LEVEL 6, 240 ST GEORGES TERRACE,
PERTH W.A 6000
PH (08) 9237 9600 FAX (08) 9322 3942

DO NOT SCALE FROM THIS DRAWING

REF DRG No.	REFERENCE DRAWING TITLE

REV	DATE	REVISIONS	BY	CHK	APP
0	10/06/2020	COPIED FROM S-119, ISSUED FOR CONSTRUCTION	SCR	LS	NH

DRAWN	SCR	10/06/2020
CHECKED	LS	10/06/2020
ENGINEER	BC	11/06/2020
APPROVED	NH	11/06/2020

DRAWING TITLE
1.8m OPEN BULK HEAD
GENERAL ARRANGEMENT
ANCHORINGS LAYOUT

SITE: VARIOUS
SIZE: A1
PROJECT: STANDARD
DRAWING No: S119-ENG-ST-DGA-0003
SHEET: 2 OF 9
REV.: 0

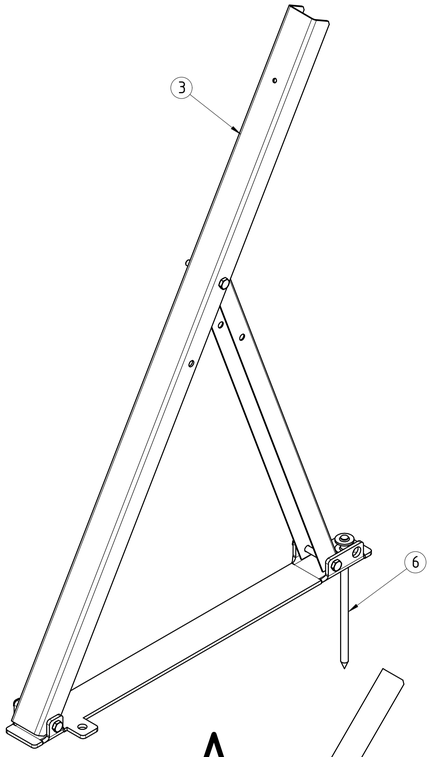

A

NOTES:
REMOVAL TOOL REQUIRED FOR SPIRAFIX ANCHORS,
M22 SPANNER/SOCKET,
HANDLE LENGTH TO SUIT CONDITIONS.

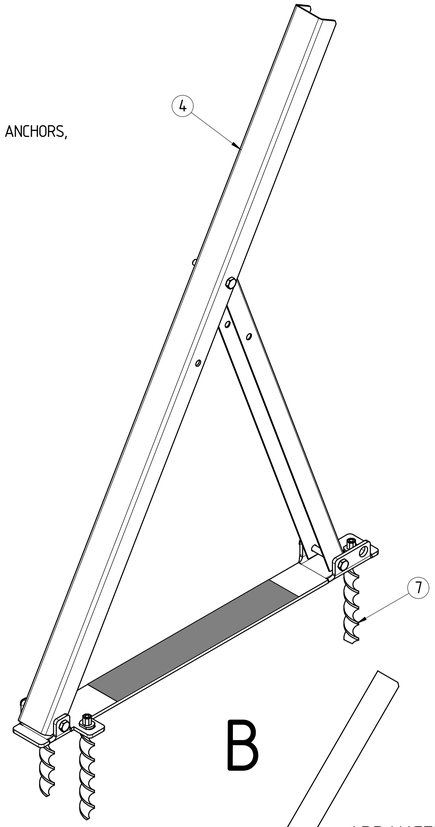

B

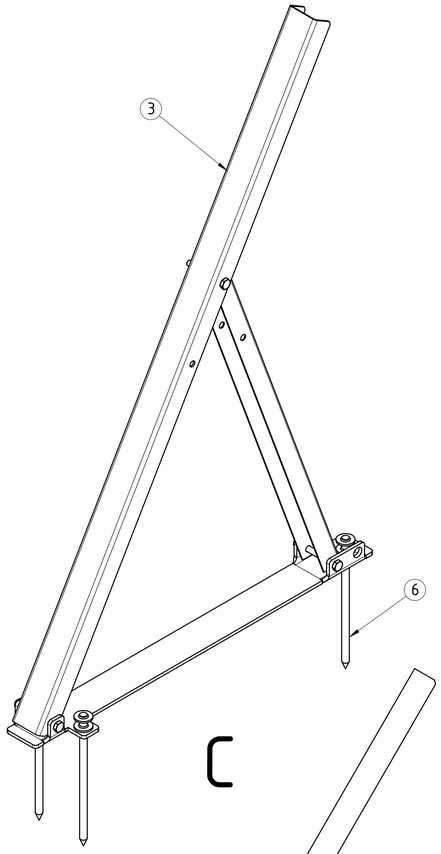

C

ARRANGEMENT 'A' NOTES:

- PURPOSE: ARRANGEMENT 'A' IS USED IN THE FRONT END LOADER ACCESS GATE ASSEMBLY (S119-ENG-ST-ASY-0034). ONLY 1 STRAIGHT PIN ANCHOR IS TO BE INSTALLED AS THE DOOR IS TO BE REMOVABLE.
- STRUT TYPE: STRAIGHT PIN STRUT
- PIN TYPE: STRAIGHT PIN ANCHOR
- PIN QUANTITY: 1

ARRANGEMENT 'B' NOTES:

- PURPOSE: ARRANGEMENT 'B' IS USED 4 STRUTS EITHER SIDE OF THE FRONT END LOADER ACCESS GATES AND 3 STRUTS EITHER SIDE OF PERSONNEL ACCESS DOORS, AS WHEN THE GATES/DOORS ARE REMOVED THE SURROUNDING STRUTS EXPERIENCE HIGHER WIND LOADS.
- STRUT TYPE: SPIRAL PIN STRUT
- PIN TYPE: SPIRAL PIN ANCHOR
- PIN QUANTITY: 3

ARRANGEMENT 'C' NOTES:

PURPOSE: ARRANGEMENT 'C' IS USED IN ALL LOCATIONS, OTHER THAN WHERE ARRANGEMENT 'A' AND 'B' ARE USED

- STRUT TYPE: STRAIGHT PIN STRUT
- PIN TYPE: STRAIGHT PIN ANCHOR
- PIN QUANTITY: 3

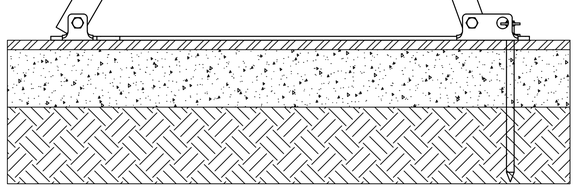

A

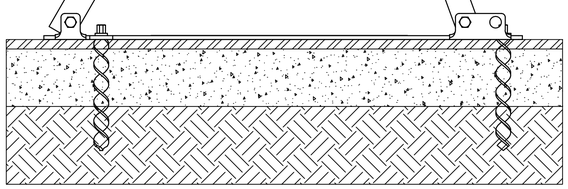

B

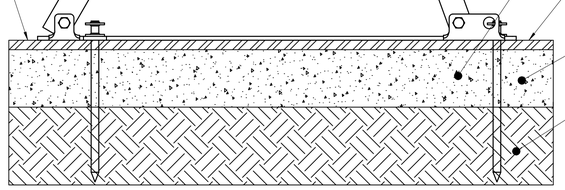

C

CBH GROUP HEAD OFFICE
LEVEL 6, 240 ST GEORGES TERRACE,
PERTH W.A 6000
PH (08) 9237 9600 FAX (08) 9322 3942

DO NOT SCALE FROM THIS DRAWING

REF DRG No.	REFERENCE DRAWING TITLE

REV	DATE	REVISIONS	BY	CHK	APP
0	10/06/2020	COPIED FROM S-119, ISSUED FOR CONSTRUCTION	SCR	LS	NH

DRAWN	SCR	10/06/2020
CHECKED	LS	10/06/2020
ENGINEER	BC	11/06/2020
APPROVED	NH	11/06/2020

DRAWING TITLE
1.8m OPEN BULK HEAD
GENERAL ARRANGEMENT
TYPICAL ANCHORINGS

SITE: VARIOUS
SIZE: A1
PROJECT: STANDARD
DRAWING No: S119-ENG-ST-DGA-0003
SHEET: 3 OF 9
REV.: 0

TEK SCREW NOTE:

ON OBH CURVED END WALLS, WHERE CLADDING OVERLAPS (EVERY THIRD STRUT), LONGER TEK SCREWS WILL BE REQUIRED AS THE CLADDING MAY NOT SIT FLUSH WITH THE STRUT. SEE BOM FOR LONGER TEK SCREW SPECIFICATION. SEE SHEET 9 FOR FURTHER INSTALLATION DETAILS.

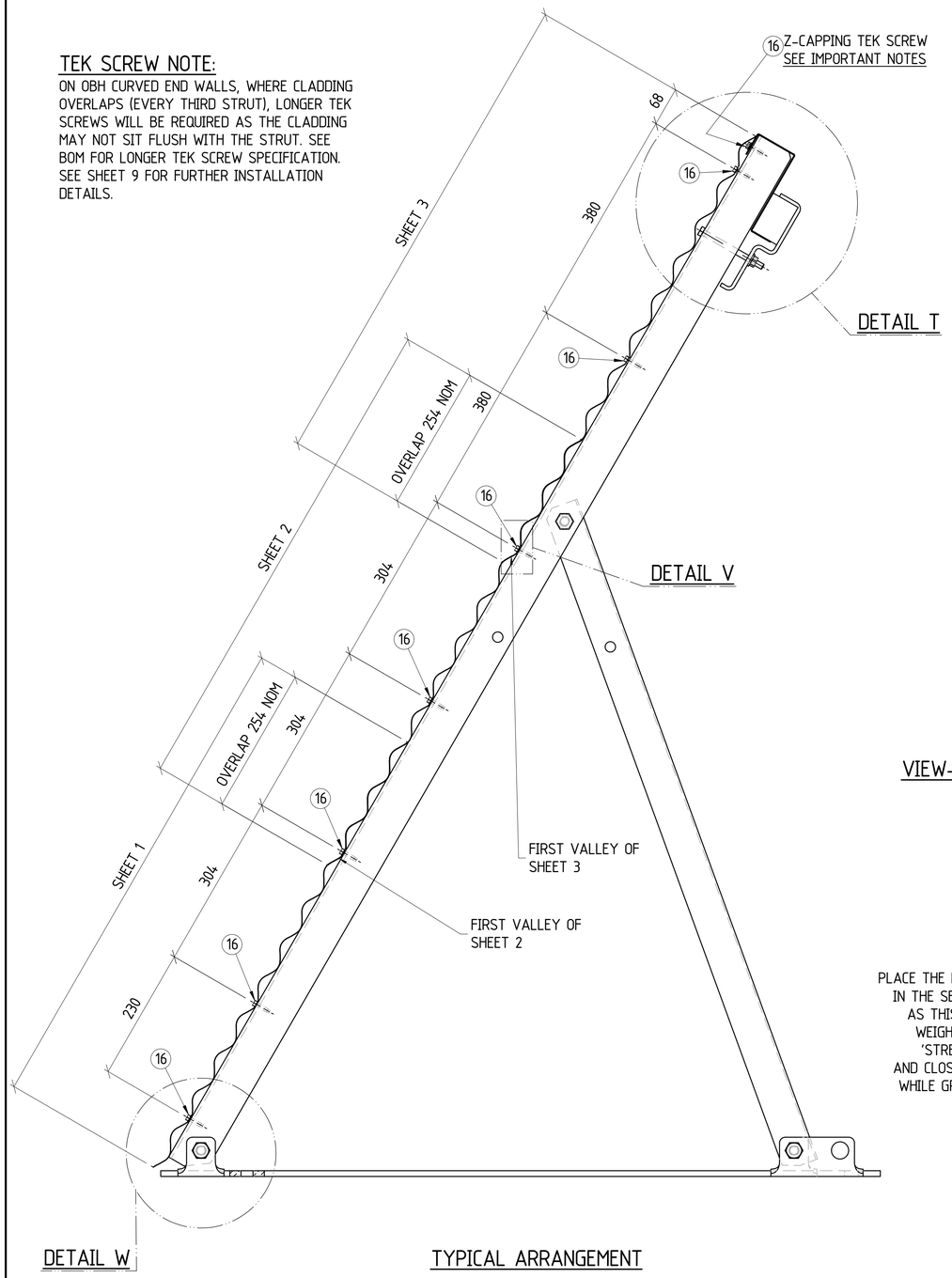

TYPICAL ARRANGEMENT

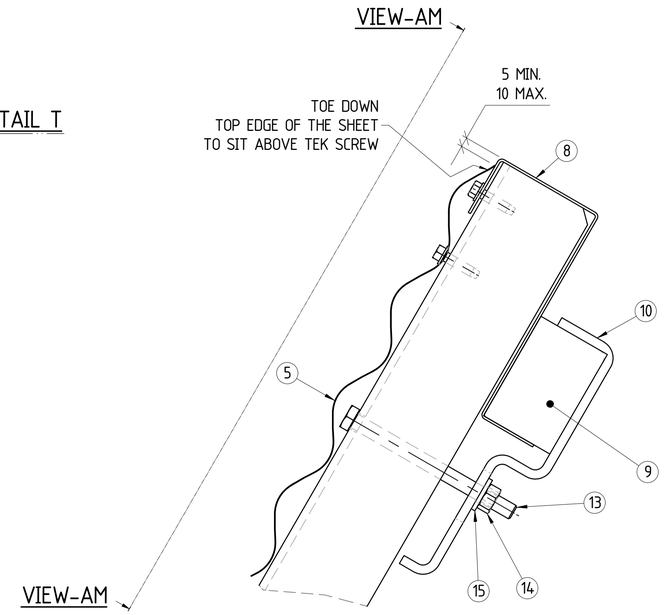

DETAIL T

IMPORTANT NOTE:

TYPICAL ALL JOINTS, EXCEPT DOOR/GATE JOINS:

- 'Z' CAPPING SHALL BUTT JOIN TO THE CENTRE LINE OF THE STRUT.
- ALL Z CAPPING MUST BE ALIGNED AS ACCURATELY AS POSSIBLE. ANY MIS-ALIGNMENT IN THE 'Z' CAPPING WILL CREATE SHARP EDGES, WHICH MAY DAMAGE THE OBH TARP. MAXIMUM 'Z' CAPPING MISALIGNMENT TO BE 2mm IN ALL DIRECTIONS.
- WHERE 'Z' CAPPING BUTT JOINS OVER A STRUT, FIX 'Z' CAP WITH 2 x TEK SCREWS, ONE IN EACH 'Z' CAP (SHOWN BELOW)
- WHERE 'Z' CAPPING PASSES OVER A STRUT, FIX 'Z' CAP WITH 1 x TEK SCREW, INLINE WITH THE CENTRE OF THE STRUT.

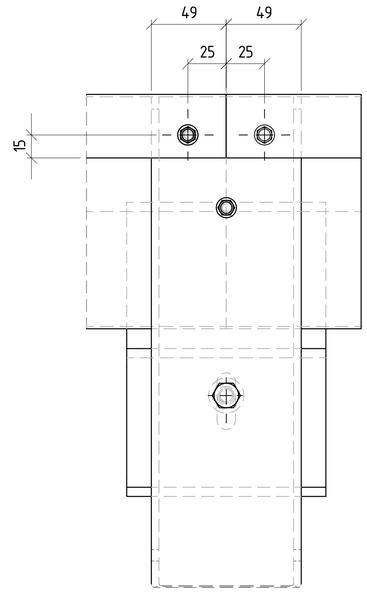

VIEW-AM
(CLADDING NOT SHOWN FOR CLARITY)

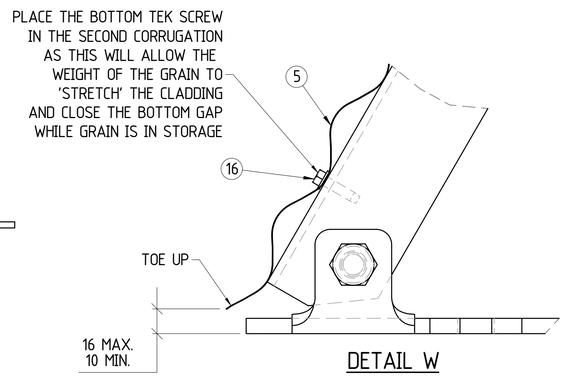

DETAIL W

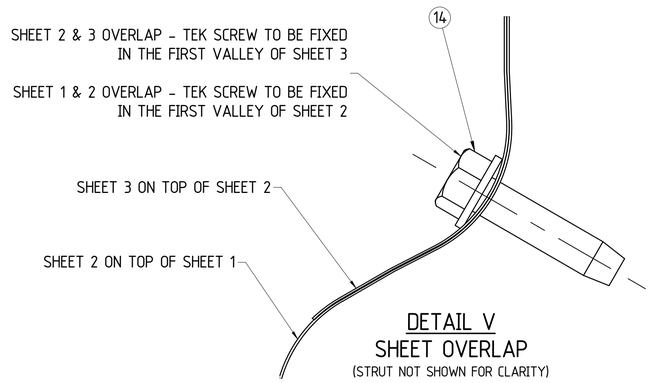

DETAIL V
SHEET OVERLAP
(STRUT NOT SHOWN FOR CLARITY)

CBH GROUP HEAD OFFICE
LEVEL 6, 240 ST GEORGES TERRACE,
PERTH W.A 6000
PH (08) 9237 9600 FAX (08) 9322 3942

DO NOT SCALE FROM THIS DRAWING

REF DRG No.	REFERENCE DRAWING TITLE	REV	DATE	REVISIONS	BY	CHK	APP

REV	DATE	REVISIONS	BY	CHK	APP
0	10/06/2020	COPIED FROM S-119, ISSUED FOR CONSTRUCTION	SCR	LS	NH

DRAWN	SCR	10/06/2020
CHECKED	LS	10/06/2020
ENGINEER	BC	11/06/2020
APPROVED	NH	11/06/2020

DRAWING TITLE
1.8m OPEN BULK HEAD
GENERAL ARRANGEMENT
TYPICAL WALL ASSEMBLY

SITE: VARIOUS
SIZE: A1
PROJECT: STANDARD
DRAWING No: S119-ENG-ST-DGA-0003
SHEET: 4 OF 9
REV.: 0

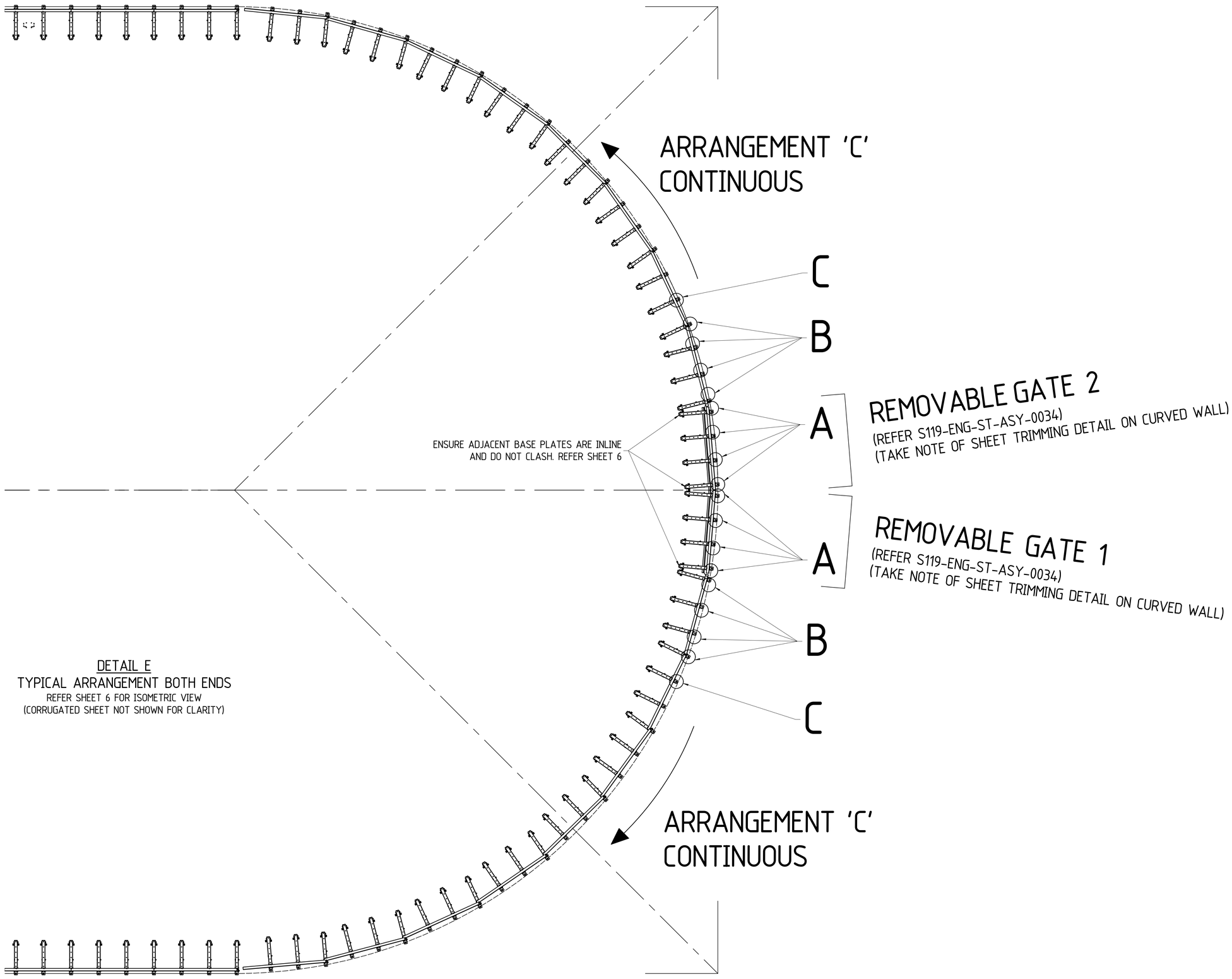

DETAIL E
TYPICAL ARRANGEMENT BOTH ENDS
REFER SHEET 6 FOR ISOMETRIC VIEW
(CORRUGATED SHEET NOT SHOWN FOR CLARITY)

CBH GROUP HEAD OFFICE
LEVEL 6, 240 ST GEORGES TERRACE,
PERTH W.A 6000
PH (08) 9237 9600 FAX (08) 9322 3942

DO NOT SCALE FROM THIS DRAWING

REF DRG No.	REFERENCE DRAWING TITLE

REV	DATE	REVISIONS	BY	CHK	APP
0	10/06/2020	COPIED FROM S-119, ISSUED FOR CONSTRUCTION	SCR	LS	NH

DRAWN	SCR	10/06/2020
CHECKED	LS	10/06/2020
ENGINEER	BC	11/06/2020
APPROVED	NH	11/06/2020

DRAWING TITLE
1.8m OPEN BULK HEAD
GENERAL ARRANGEMENT
TYPICAL CURVED END WALL LAYOUT

SITE: VARIOUS
SIZE: A1
PROJECT: STANDARD
DRAWING No: S119-ENG-ST-DGA-0003
SHEET: 5 OF 9
REV.: 0

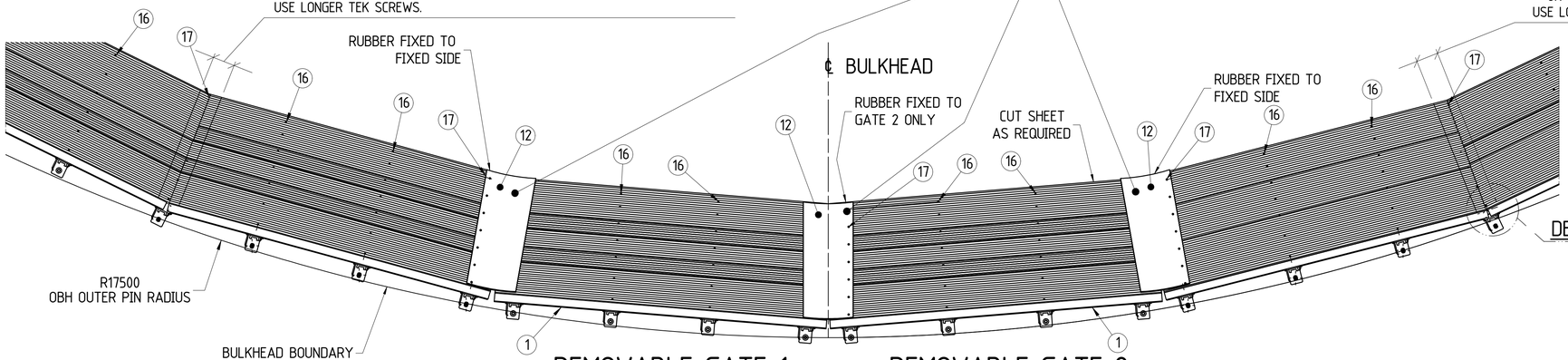

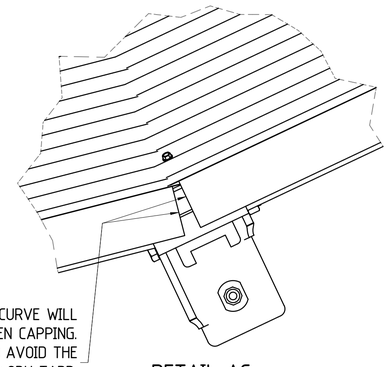

DETAIL AC

DETAIL A
FRONT END LOADER ACCESS GATES IN CURVED WALL
TYPICAL BOTH ENDS

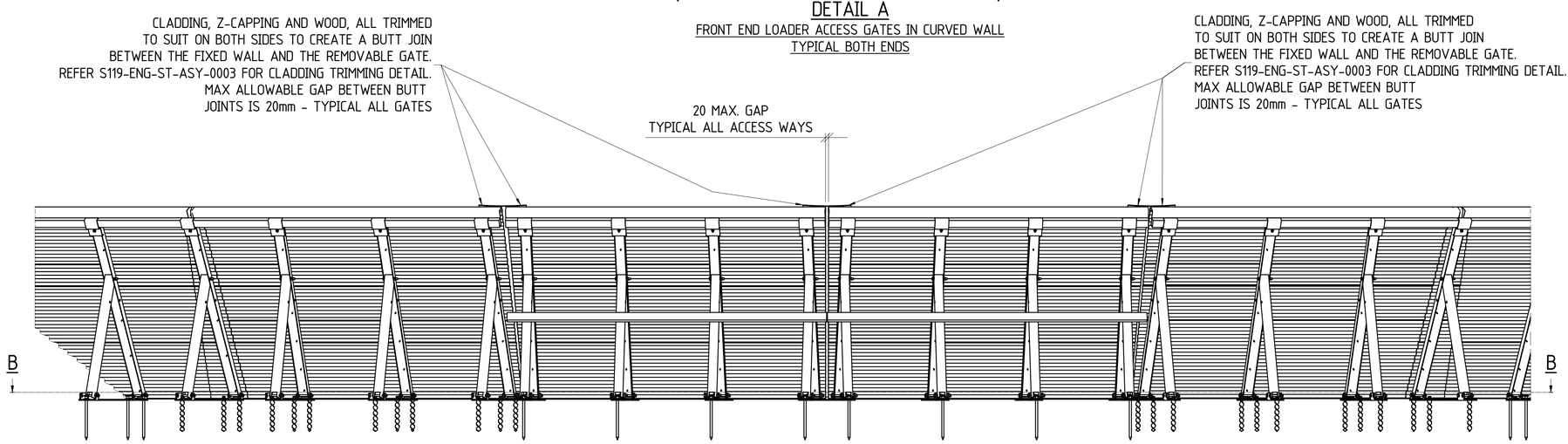

ELEVATION

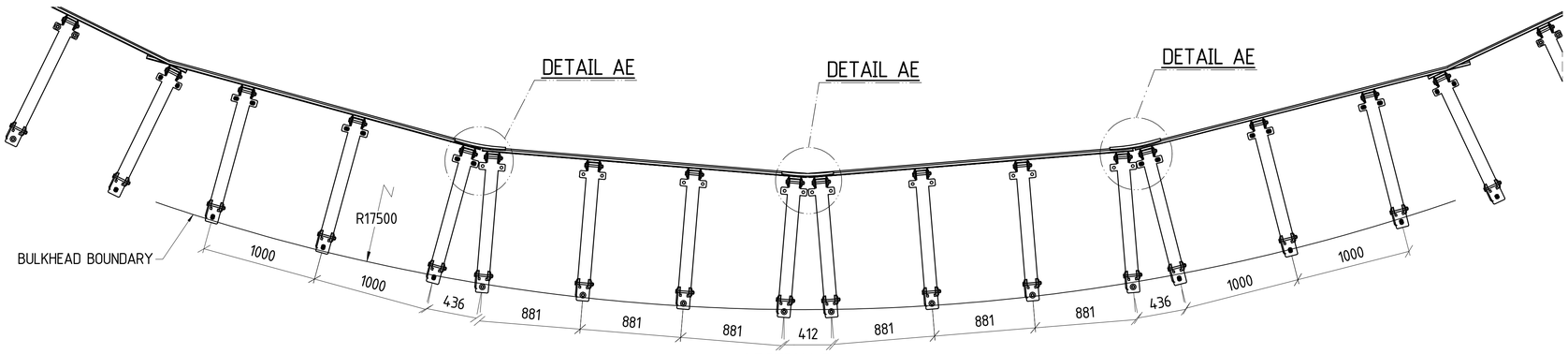

SECTION B
FRAMES FOOT PRINT

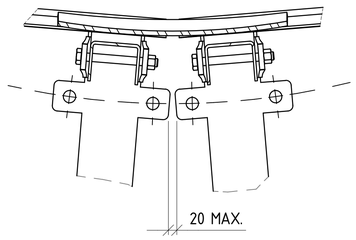

DETAIL AE
TYPICAL STRUT FOOT ALIGNMENT
AT GATE JOINS
(PINS NOT SHOWN FOR CLARITY)

CBH GROUP HEAD OFFICE
LEVEL 6, 240 ST GEORGES TERRACE,
PERTH W.A 6000
PH (08) 9237 9600 FAX (08) 9322 3942

DO NOT SCALE FROM THIS DRAWING

REF DRG No.	REFERENCE DRAWING TITLE

REV	DATE	REVISIONS	BY	CHK	APP
0	10/06/2020	COPIED FROM S-119, ISSUED FOR CONSTRUCTION	SCR	LS	NH

DRAWN	SCR	10/06/2020
CHECKED	LS	10/06/2020
ENGINEER	BC	11/06/2020
APPROVED	NH	11/06/2020

DRAWING TITLE
1.8m OPEN BULK HEAD
GENERAL ARRANGEMENT
CURVED OBH OPENING DETAIL

SITE: VARIOUS
SIZE: A1
PROJECT: STANDARD
DRAWING No: S119-ENG-ST-DGA-0003
SHEET: 6 OF 9
REV.: 0

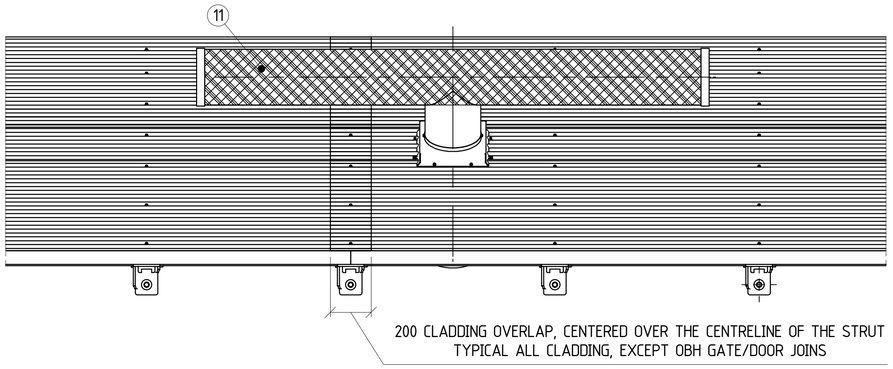

DETAIL B
'T' PIECE INSTALLATION DETAIL

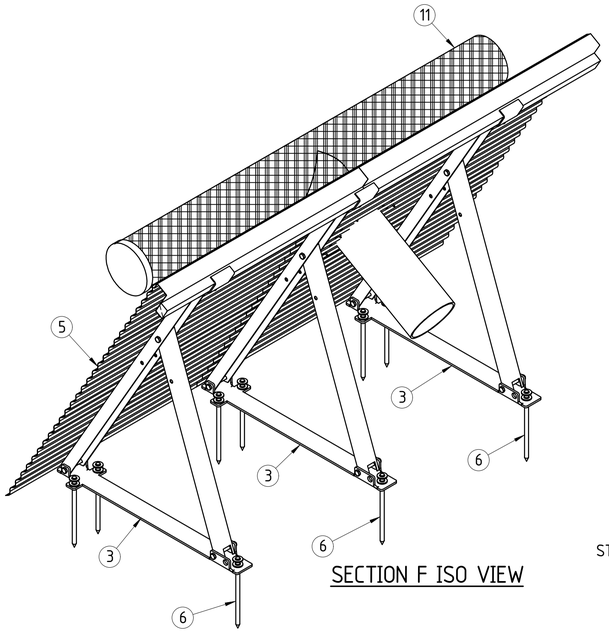

SECTION F ISO VIEW

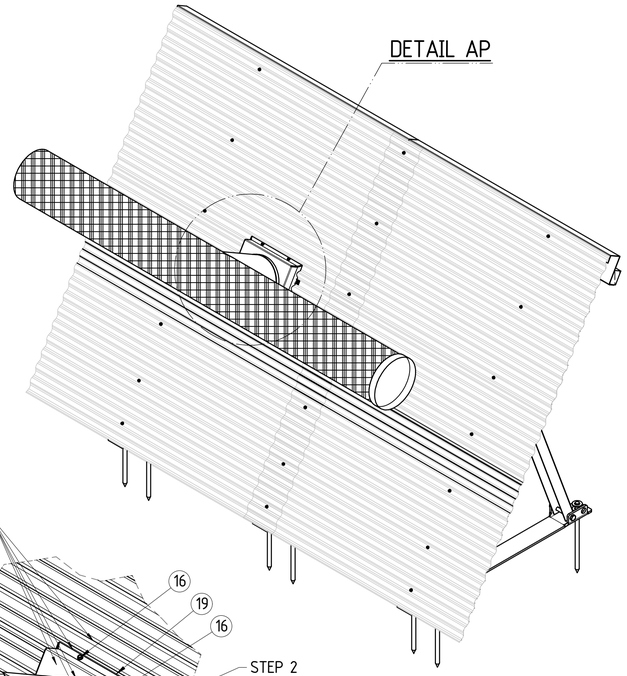

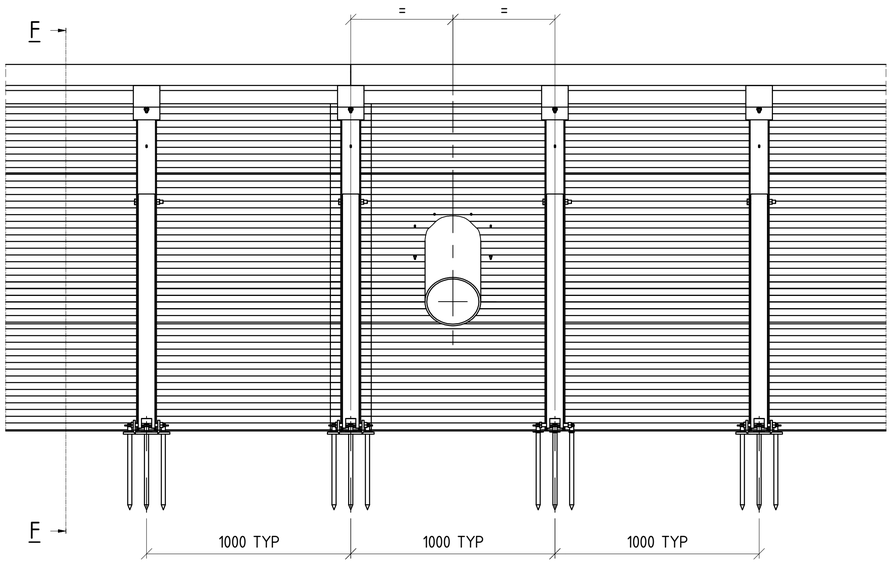

ELEVAION

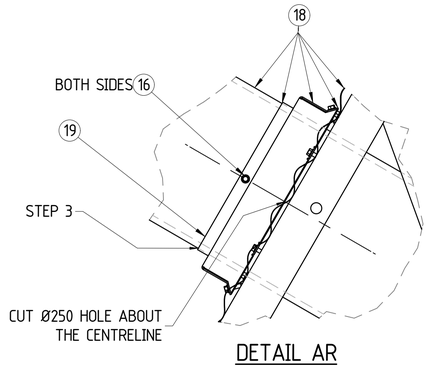

DETAIL AR

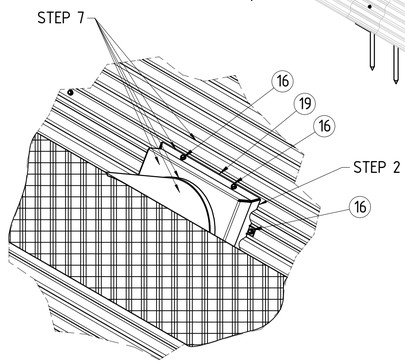

DETAIL AP

DETAIL AR

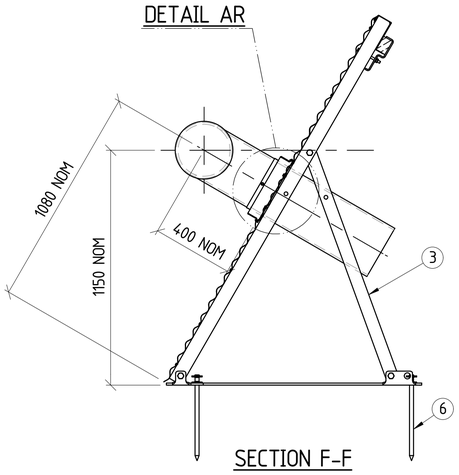

SECTION F-F

BACKGROUND:

- THE 'T' PIECE IS USED TO PUMP HAZARDOUS FUMIGANT INTO THE STORAGE AFTER IT IS FULLY SEALED. CARE MUST BE TAKEN WHEN INSTALLING THE 'T' PIECE AND APPLYING THE SEALANTS TO ENSURE THE SEAL IS APPLIED TO A HIGH QUALITY.

USE THE FOLLOWING QUANTITY'S PER 1 'T'PIECE

- 1 X 600ML SAUSAGE OF BOSTIK SEAL AND FLEX 1
- 1L OF NOVALAST LTM 151

PROCEDURE:

- STEP 1: PREPARE AND CLEAN SURFACES WHERE SEALANTS ARE TO BE APPLIED AS PER MANUFACTURERS SPECIFICATIONS.
- STEP 2: INITIAL COLLAR INSTALL; APPLY A THICK (5-10MM) BEAD OF 'BOSTIK SEAL N FLEX 1' TO ALL EDGES OF THE T-PIECE MOUNTING COLLAR WHICH WILL CONTACT THE CORRUGATED CLADDING. TEK SCREW T-PIECE MOUNT (WITH BOSTIC SEALANT APPLIED) TO THE CLADDING USING 8 TEK SCREWS, EVENLY SPACED AROUND THE T-PIECE MOUNTING COLLAR.
- STEP 3: INSERT T-PIECE INTO THE T-PIECE MOUNTING COLLAR. SECURE THE T-PIECE AT THE LOCATION SHOWN, USING 2 X TEK SCREWS, THROUGH THE MOUNTING COLLAR RING. APPLY A THICK (5-10MM) BEAD OF 'BOSTIK SEAL N FLEX 1' AROUND THE JOIN AND AROUND ANY GAPS, INCLUDING AROUND THE TEK SCREWS. ALSO APPLY A THICK BEAD TO FILL THE GAP BETWEEN THE CLADDING AND THE T-PIECE, ON THE OUTSIDE OF THE BULKHEAD.
- STEP 4: LET SEALANT DRY AS PER MANUFACTURER'S DIRECTIONS.
- STEP 5: APPLY A SECOND THICK (5-10MM) BEAD OF 'BOSTIC SEAL N FLEX 1' AROUND ALL JOINS BETWEEN THE T-PIECE MOUNTING COLLAR, THE T-PIECE AND THE CLADDING.
- STEP 6: LET SEALANT DRY AS PER MANUFACTURER'S DIRECTIONS.
- STEP 7: PAINT THE ENTIRE T-PIECE MOUNTING COLLAR AND 150MM OF CLADDING AROUND THE COLLAR. ALSO PAINT 150MM OF THE T-PIECE, PAST THE COLLAR RING JOIN. PAINT WITH 'NOVALAST 151 LTM'
- STEP 8: LET SEALANT DRY AS PER MANUFACTURER'S DIRECTIONS.

CBH GROUP HEAD OFFICE
LEVEL 6, 240 ST GEORGES TERRACE,
PERTH W.A 6000
PH (08) 9237 9600 FAX (08) 9322 3942

DO NOT SCALE FROM THIS DRAWING

REF DRG No.	REFERENCE DRAWING TITLE	REV	DATE	REVISIONS	BY	CHK	APP
		0	10/06/2020	COPIED FROM S-119, ISSUED FOR CONSTRUCTION	SCR	LS	NH

DRAWN	SCR	10/06/2020
CHECKED	LS	10/06/2020
ENGINEER	BC	11/06/2020
APPROVED	NH	11/06/2020

DRAWING TITLE
1.8m OPEN BULK HEAD
GENERAL ARRANGEMENT
'T' PIECE DETAIL

SITE: VARIOUS
SIZE: A1
PROJECT: STANDARD
DRAWING No: S119-ENG-ST-DGA-0003
SHEET: 7 OF 9
REV.: 0

TYPICAL RUBBER FIXINGS, BOTH ENDS

- ATTACH CONVEYOR BELT OVER JOINTS (SEE BOM FOR BELT DETAILS)
- FIX RUBBER USING 45MM LONG TEK SCREWS, USING 7 TEK SCREWS PER RUBBER STRIP

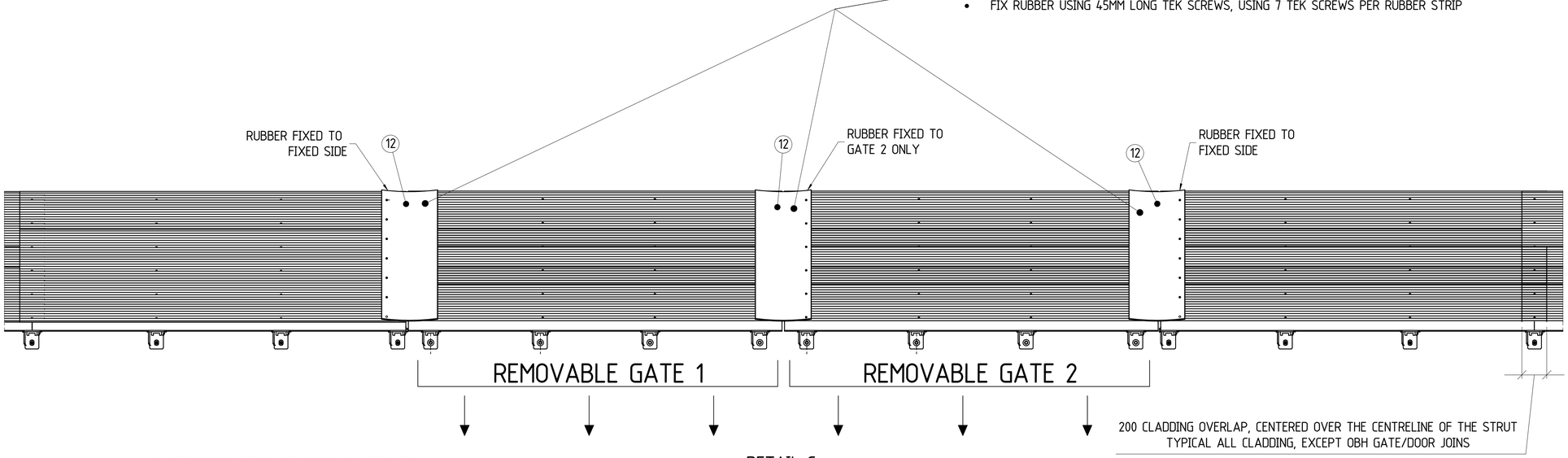

DETAIL C
FRONT END LOADER ACCESS GATES IN STRAIGHT WALL
TYPICAL BOTH SIDES

CLADDING, Z-CAPPING AND WOOD, ALL TRIMMED TO SUIT ON BOTH SIDES TO CREATE A BUTT JOIN BETWEEN THE FIXED WALL AND THE REMOVABLE GATE. REFER S119-END-ST-ASY-0003 FOR CLADDING TRIMMING DETAIL. MAX ALLOWABLE GAP BETWEEN BUTT JOINTS IS 20MM - TYPICAL ALL GATES

Z-CAPPING MUST BE NEATLY BUTT JOINED AND ALIGNED IN ALL DIRECTIONS TO ENSURE THAT THERE ARE NO SHARP EDGES WHICH COULD PUNCTURE THE OBH TARP. MAX MISALIGNMENT OF 2MM IN ALL DIRECTIONS. TYPICAL ALL JOINTS EXCEPT AT OBH DOOR/GATE JOINS.

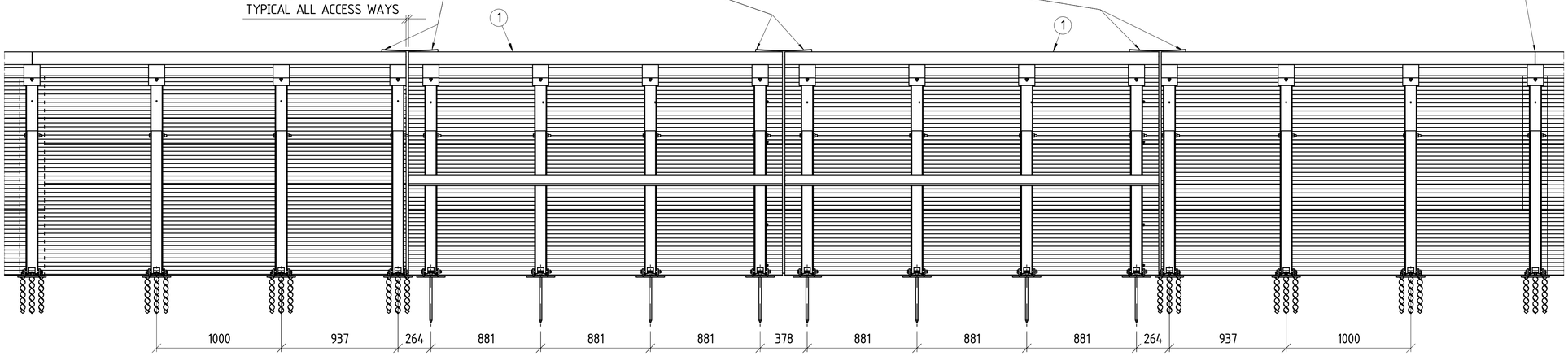

ELEVATION

CBH GROUP HEAD OFFICE
LEVEL 6, 240 ST GEORGES TERRACE,
PERTH W.A 6000
PH (08) 9237 9600 FAX (08) 9322 3942

DO NOT SCALE FROM THIS DRAWING

REF DRG No.	REFERENCE DRAWING TITLE

REV	DATE	REVISIONS	BY	CHK	APP
0	10/06/2020	COPIED FROM S-119, ISSUED FOR CONSTRUCTION	SCR	LS	NH

DRAWN	SCR	10/06/2020
CHECKED	LS	10/06/2020
ENGINEER	BC	11/06/2020
APPROVED	NH	11/06/2020

DRAWING TITLE
1.8m OPEN BULK HEAD
GENERAL ARRANGEMENT
STRAIGHT OBH OPENING DETAIL

SITE: VARIOUS
SIZE: A1
PROJECT: STANDARD
DRAWING No: S119-ENG-ST-DGA-0003
SHEET: 8 OF 9
REV: 0

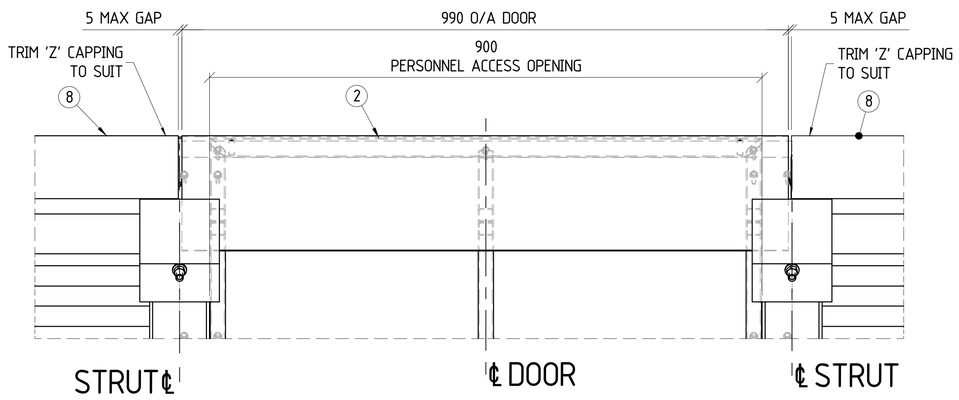

DETAIL AK

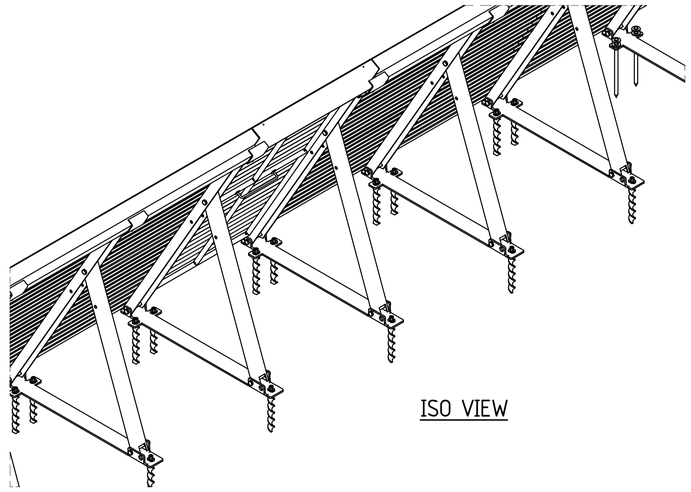

ISO VIEW

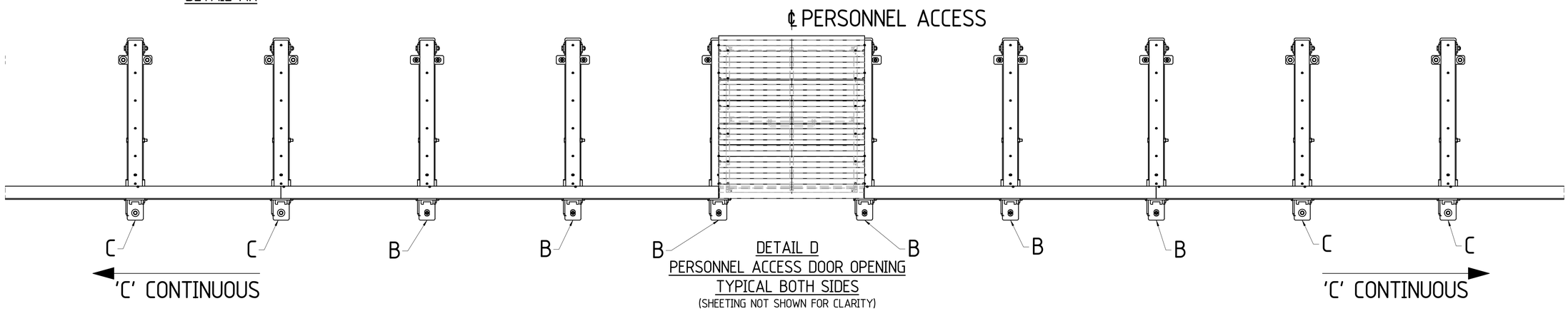

DETAIL D
PERSONNEL ACCESS DOOR OPENING
TYPICAL BOTH SIDES
(SHEETING NOT SHOWN FOR CLARITY)

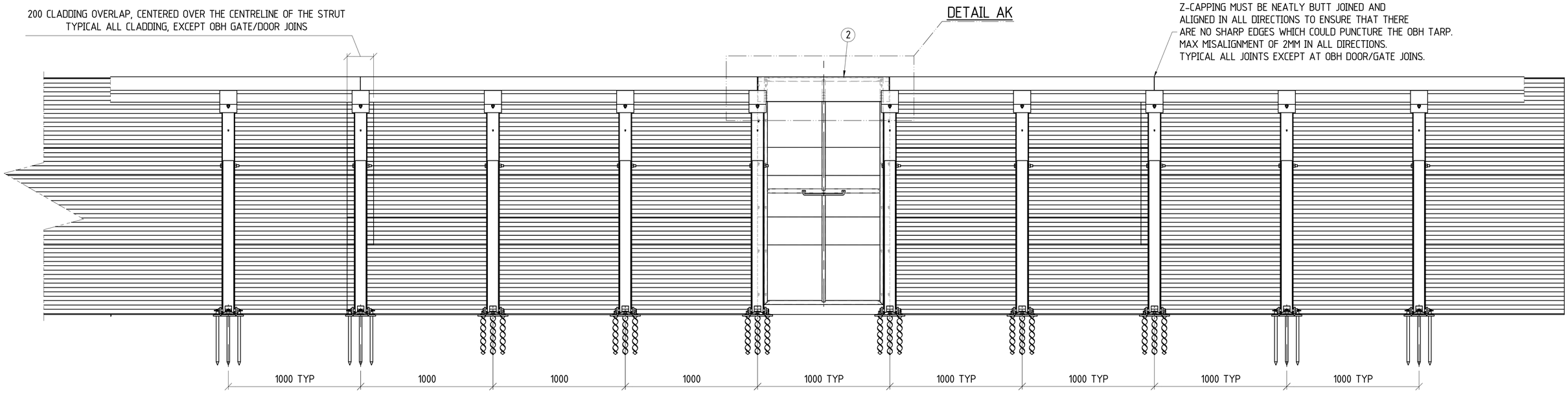

ELEVATION

CBH GROUP HEAD OFFICE
LEVEL 6, 240 ST GEORGES TERRACE,
PERTH W.A 6000
PH (08) 9237 9600 FAX (08) 9322 3942

DO NOT SCALE FROM THIS DRAWING

REF DRG No.	REFERENCE DRAWING TITLE

REV	DATE	REVISIONS	BY	CHK	APP
0	10/06/2020	COPIED FROM S-119, ISSUED FOR CONSTRUCTION	SCR	LS	NH

DRAWN	SCR	10/06/2020
CHECKED	LS	10/06/2020
ENGINEER	BC	11/06/2020
APPROVED	NH	11/06/2020

DRAWING TITLE
1.8m OPEN BULK HEAD
GENERAL ARRANGEMENT
PERSONELL ACCESS DOOR DETAIL

SITE: VARIOUS
SIZE: A1
PROJECT: STANDARD
DRAWING No: S119-ENG-ST-DGA-0003
SHEET: 9 OF 9
REV.: 0

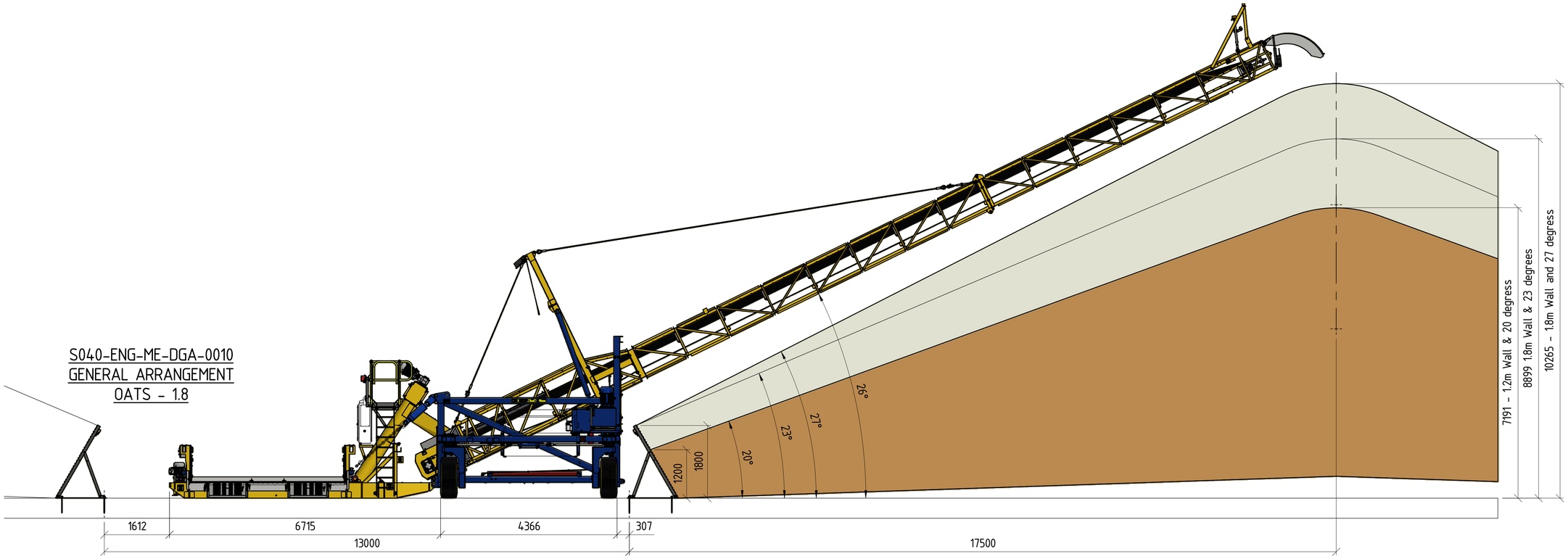

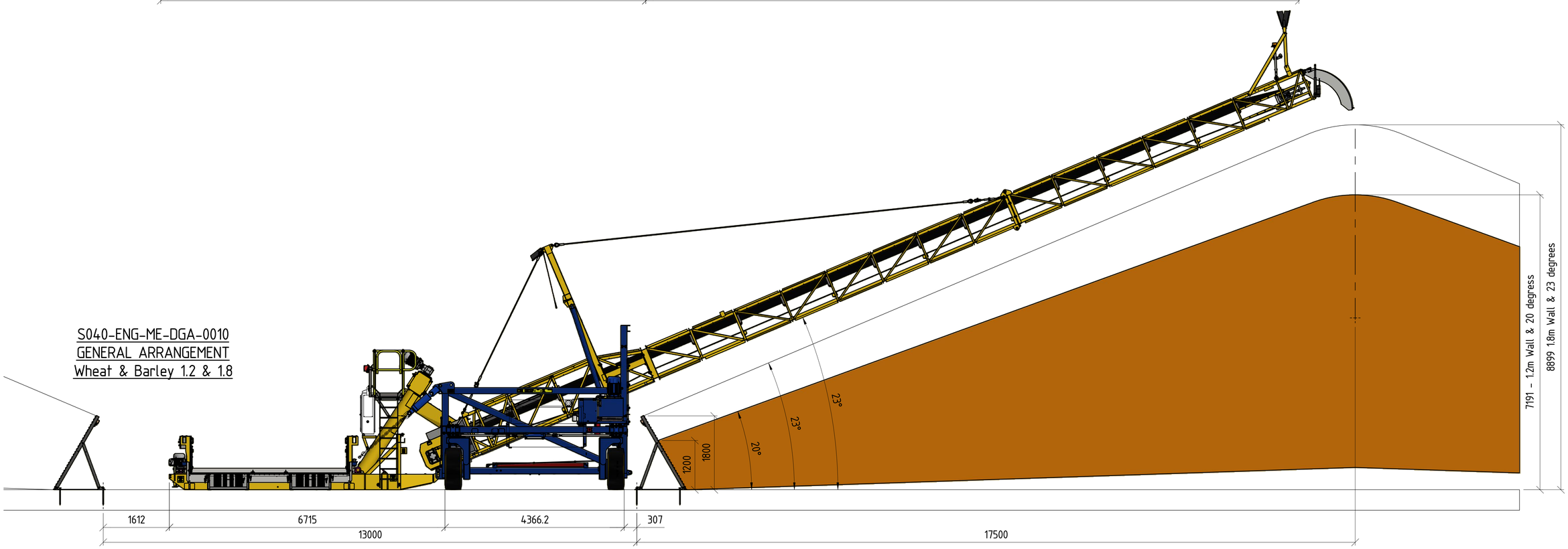

CBH GROUP HEAD OFFICE
30 DELHI STREET, WEST PERTH W.A 6005
PH (08) 9237 9600 FAX (08) 9322 3942

DO NOT SCALE FROM THIS DRAWING

REF DRG No.	REFERENCE DRAWING TITLE	REV	DATE	REVISIONS	BY	CHK	APP

REV	DATE	REVISIONS	BY	CHK	APP
0	30/08/2018	ISSUED FOR CONSTRUCTION	DD		

DRAWN	DD	30/08/2018
CHECKED		30/12/1899
ENGINEER		30/12/1899
APPROVED		30/12/1899

DRAWING TITLE
DOG STACKER BULKKHEAD ARRANGEMENT
GENERAL ARRANGEMENT

SITE: VARIOUS
SIZE: A1
PROJECT: LAYOUT
DRAWING No: S040-ENG-ME-DGA-0010
SHEET: 1 OF 2
REV.: 0

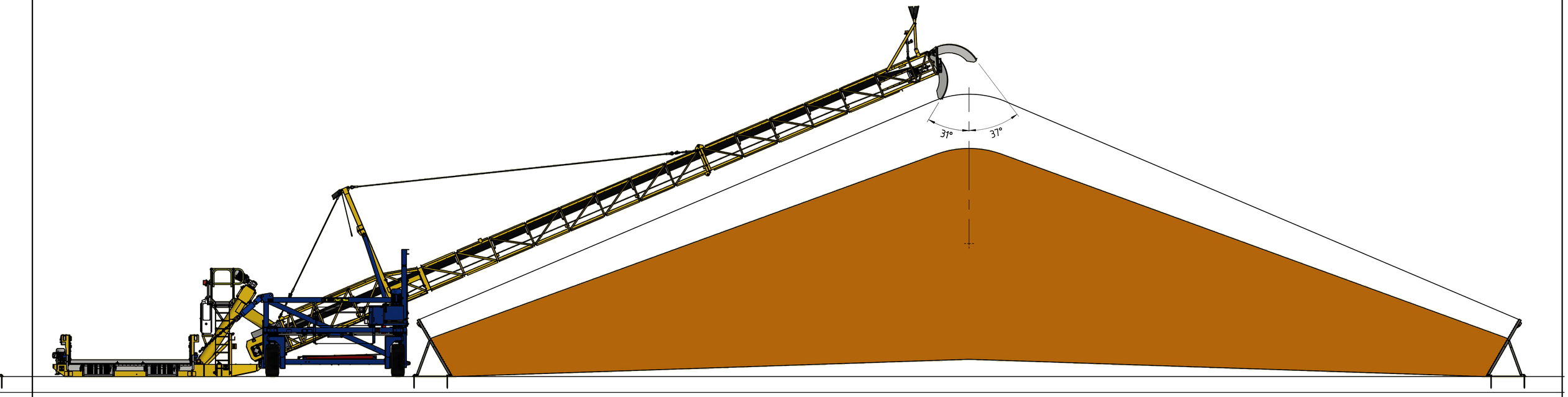

S040-ENG-ME-DGA-0010
GENERAL ARRANGEMENT

CBH GROUP HEAD OFFICE
30 DELHI STREET, WEST PERTH W.A 6005
PH (08) 9237 9600 FAX (08) 9322 3942

DO NOT SCALE FROM THIS DRAWING

REF DRG No.	REFERENCE DRAWING TITLE

REV	DATE	REVISIONS	BY	CHK	APP
0	30/08/2018	ISSUED FOR CONSTRUCTION	DD		

DRAWN	DD	30/08/2018
CHECKED		30/12/1899
ENGINEER		30/12/1899
APPROVED		30/12/1899

DRAWING TITLE
DOG STACKER BULKKHEAD ARRANGEMENT
GENERAL ARRANGEMENT

SITE: VARIOUS
SIZE: A1
PROJECT: LAYOUT
DRAWING No: S040-ENG-ME-DGA-0010
SHEET: 2 OF 2
REV.: 0

Traffic Impact Statement

Project:	Merredin Emergency OBH
Client:	CBH
Author:	J. Bridge
Date:	20th July 2022
Shawmac Document #:	2207001-TIS-002

CONSULTING CIVIL AND TRAFFIC ENGINEERS
1 ST. FLOOR, 908 ALBANY HIGHWAY, EAST VICTORIA PARK WA 6101.
PHONE|+61 8 9355 1300
EMAIL| admin@ shawmac.com.au

Document Status: Client Review

Version	Prepared By	Reviewed By	Approved By	Date
A	J. Bridge	R. Needham	J. Bridge	20.07.22

Disclaimer

File Reference: \\shaw-svr\NewData\Jobs Active 2022\CE - Roads and Drainage\CBH_Emergency TIA's_2207001\3. Documents\3.6 TIA\Merridin\2207001-TIS-002 Rev A.docx

Contents

Figures

Tables

1. Introduction

1.1. Background

CBH are proposing to construct an emergency open bulkhead (OBH) at their existing Merredin (West) site in preparation for the 2022 harvest. It is proposed to construct two new emergency OBH's (OBH 98 & 99) with 83,840t capacity which will utilise the existing site access and exit and marshal/sample/weigh facilities.

Shawmac have been commissioned to prepare a Traffic Impact Statement assessing the impacts of the proposed emergency OBH storage on the surrounding road network.

Figure 1 shows the existing site and location of the proposed emergency OBH. Refer to **Appendix A – CBH Concept Plan** for full details of the proposal.

The emergency OBH's are anticipated to be in place for one year only.

Figure 1: Site Location

2. Existing Situation

2.1. Road Network

The layout and hierarchy of the existing local road network according to the Main Roads WA Road Information Mapping System is shown in **Figure 2**.

Figure 2: Surrounding Road Hierarchy

2.2. Carriageway Width and Cross Section

The carriageway and configuration of surrounding roads is summarised in **Table 1**.

Table 1: Road Configuration

Road and Location	Road Type	Cross Section	Carriageway Width (Approx.)	Sealed Pavement Width (Approx.)
Goldfields Highway	Access Road	Single carriageway, two lane, two way	9m	6.0m
Crooks Road – North of Gabo Ave	Access Road		8m	6.0m
Crooks Road – South of Gabo Ave	Local Distributor		9m	6.0m
Gabo Avenue	Local Distributor		10m	7.0m

2.3. Traffic Volumes

Based on MRWA's Traffic Map, there are no traffic count sites for any of the road's fronting or adjacent to the CBH site.

The nearest traffic count sites to the site are Great Eastern Highway and Barrack Street which are both Primary Distributor Roads and not considered representative of the roads providing access to the CBH site.

Refer to **Figure 3** for location of existing traffic counts in the area.

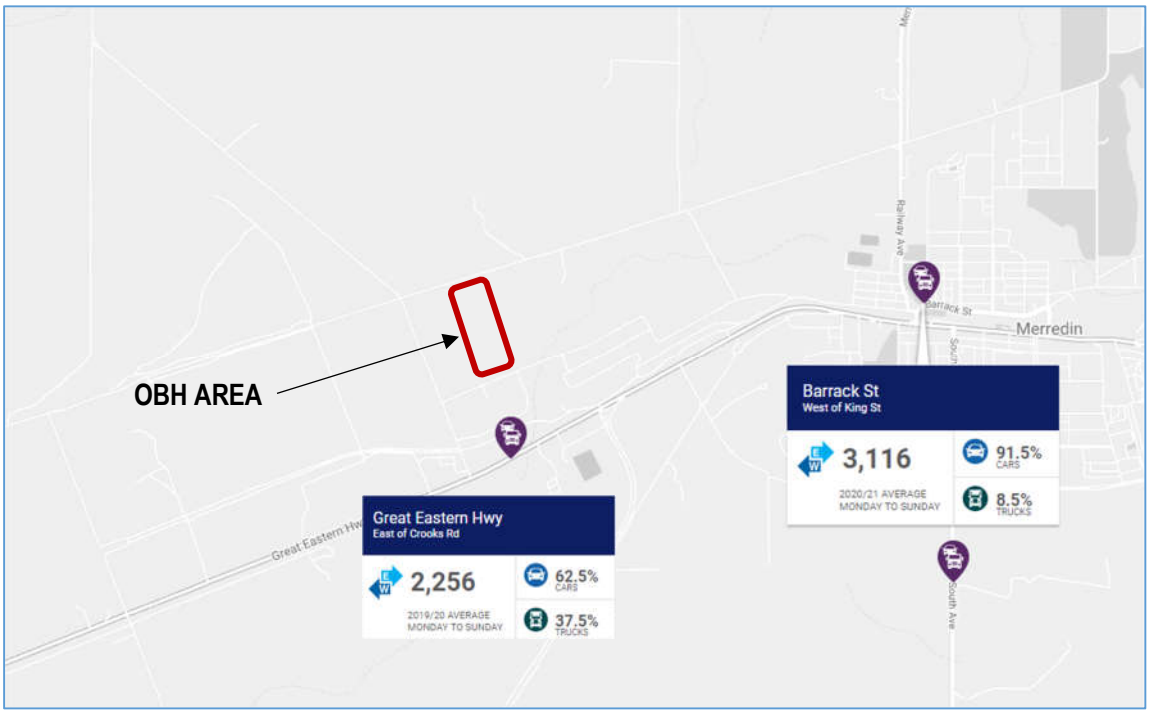

Figure 3: Adjacent Traffic Counts

Due to the connectivity that the adjacent roads provide, and as the roads typically service only the surrounding farms, it is considered that majority of the traffic on the roads would be CBH traffic and therefore minimal traffic from other public users. Therefore, it is assumed that 50 vehicles per day utilise all the roads (in both directions). Peak hour volumes have been assumed as 10% of the daily volumes and Heavy Vehicle volumes have been assumed at 40% of total movements.

Table 2 and **Table 3** below provide a summary of the estimated existing daily and peak hour traffic volumes.

Table 2: Weekday Traffic Volumes

Road	Location	Daily	% HV	Data Source
Goldfields Highway	CBH Site Frontage	50	40	Assumed
Crooks Road	Near Gabo Avenue Intersection	50	40	Assumed
Gabo Avenue	CBH Site Frontage	50	40	Assumed

Table 3: Weekday Peak Hour Traffic Volumes

Road / Direction	Location	Peak Hour	Data Source
Goldfields Highway	CBH Site Frontage	5	Assumed
Crooks Road	Near Gabo Avenue Intersection	5	Assumed
Gabo Avenue	CBH Site Frontage	5	Assumed

It is further assumed that the above volumes do not include any existing CBH traffic.

2.4. RAV Status

As per MRWA's HVS Network Mapping Tool:

- Goldfields Highway (fronting the CBH site) is categorised under the Tandem Drive 7.3 network and Tri Drive 4.1 network with the following conditions.
    - All operators must carry current written approval from the road asset owner permitting use of the road.
- Crooks Road (north of Gabo Road) is categorised under the Tandem Drive 7.3 network and Tri Drive 4.1 network without conditions.
- Crooks Road (south of Gabo Road) is categorised under the Tandem Drive 7.3 network and Tri Drive 4.3 network with the following conditions.
    - All operators must carry current written approval from the road asset owner permitting use of the road.
- Gabo Avenue (fronting the CBH site) is categorised under the Tandem Drive 7.3 network and Tri Drive 4.3 network with the following conditions.
    - All operators must carry current written approval from the road asset owner permitting use of

the road.

Figure 4 shows the Tandem Drive 7.3 network in the vicinity of the site.

Figure 4: RAV Network

2.5. Speed Limit

As per MRWA's Road Information Mapping System, the adjacent roads are subject to a 110km/h limit as they are outside built-up areas. **Figure 5** shows the speed zoning of the surrounding road network.

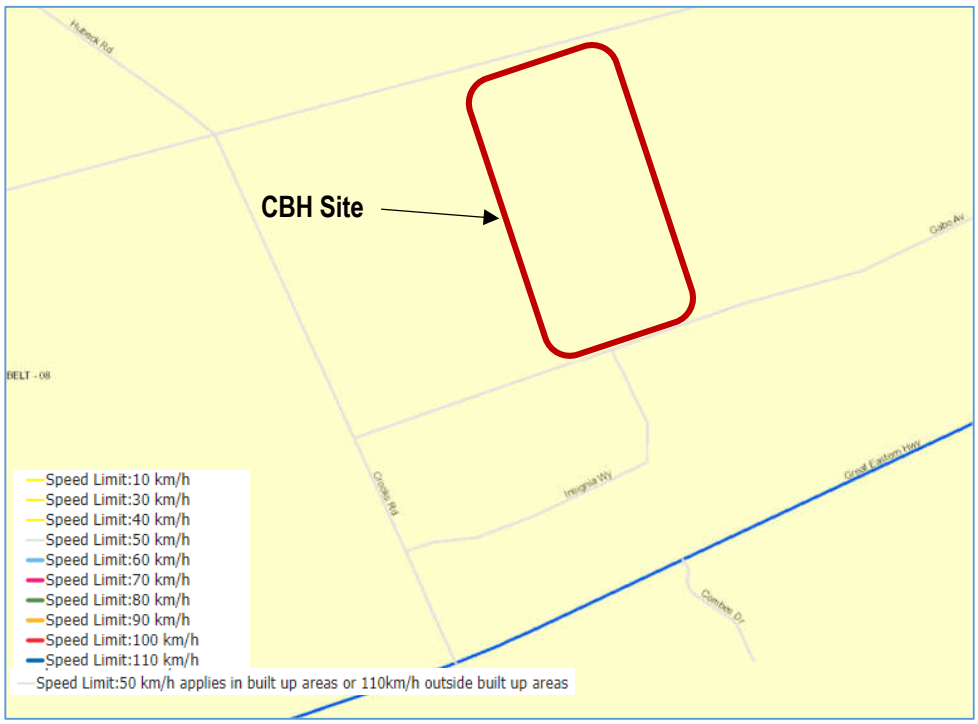

Figure 5: Speed Zoning

2.6. Crash History

Crash data for the surrounding roads was sourced from MRWA Crash Analysis Reporting System (CARS) for the 5-year period (last checked on 18/07/22).

As per in **Figure 6**, there we no crashes recorded for any of the CBH site adjacent roads.

Figure 6: MRWA Crash Locations Mapping

The crash history is considered typically of a rural arterial highway and does not appear to be associated with the CBH site.

2.7. Changes to Surrounding Transport Networks

There are no known changes to the adjacent network that have the potential to affect the assessment.

3. Traffic Generation

3.1. Development Details

CBH propose to construct two new temporary OBH's with a nameplate storage capacity of 83,840t. This will increase the total site storage capacity from 859,800t to 943,640t. Note that the total site storage capacity includes 465,800t which is provided at the original Merredin site along Great Eastern Highway and the railway line.

CBH have advised that the nameplate capacity is seldom able to be achieved. This is because of "loss by division/loss by commodity" where multiple grain types are required to be stored/tarped within the same OBH, resulting in less efficient storage. CBH have advised that maximum effective storage capacity is generally around 90% of nameplate i.e., there is 10% lost due to loss by division/loss by commodity inefficiency. The effective existing storage capacity would therefore be 773,820t, increasing to 849,276t after construction of the emergency OBH.

3.2. Haulage Vehicle

It is proposed to use RAV7 trucks up to 36.5m long for the transport of grain. **Figure 7** shows a typical RAV7 vehicle. In addition, CBH also noted that while this site is rated for RAV7, deliveries would include haulage using RAV4 or even as low as RAV1 vehicles.

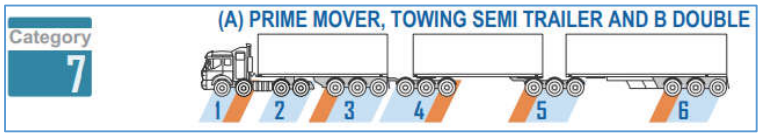

Figure 7: Typical Tandem Drive RAV7

3.3. Operating Hours and Receival Period

The campaign period for receival of grains will start mid-October and last 2-3 months. It is noted that the amount of daily receival varies depending on the supply.

CBH propose to operate the site 12 hours a day (6 AM to 6 PM) and Monday to Sunday with minor variations of start and finish times.

3.4. 5-year Average Traffic Data

CBH have provided the past 5-year average traffic data associated with the Merredin Site as follows:

- Average receivals per year – 462,770t
- Maximum receivals (in the last 3 years) – 554,305t (2021/2022)
- Average truck payload - 54t

- Origin direction split – 16.60% north, 0.72% south, 56.08% east, 26.60% west.

The 5-year average traffic / receival data indicates that the site is currently not being loaded to full capacity. However, given the significant harvest this year, CBH is anticipating a significant increase in received tonnes to the site (compared to the 5-year average).

Although the entire Merredin site provides a significant amount of storage, well over the 5-year average, it is understood that a large portion of this is not available for receivals

3.5. Predicted Traffic without Emergency OBH

CBH are proposing to construct the emergency OBH's to increase site capacity so that more grain can be stored through the harvest and inefficient out loading movements within the harvest period are avoided. As Merredin is a rail site, typically grain is stored at the site and railed to the export port after harvest. If the site storage capacity is reached during harvest, grain would need to be out loaded by truck during the harvest to allow grain to continue to be received from the nearby farms. This will involve shifting the grain from Merredin to the next available site with storage capacity rather than rail outloading. This double-handling of grain is inefficient in terms of cost and adds additional traffic to the surrounding road network during the already busy harvest period.

For comparative purposes it is useful to assess what would occur if the proposed emergency bulkheads are not constructed.

CBH expect that the 2022 harvest receivals exceed the available capacity of the site by approximately the volume of the planned emergency storage. This would result in receivals of approximately 75,456t (83,840t x 90% efficiency). Based on the average truck payload of 54t, this would result in an additional 1,397 truck movements within the harvest period for out loading.

Note that for the purposes of this assessment a single 'movement' is defined as a round trip i.e. the site entry/delivery and site exit/return home comprise one movement.

If the emergency OBH is constructed, then the 1,397 truck movements would not be required as the grain would be stored for rail outloading from the site which occurs outside the harvest period.

3.6. Predicted Traffic with Emergency OBH

Regardless of whether the emergency OBH's are built, the same higher than average delivery movements to the Merredin site will occur during the harvest. The effect of constructing the emergency storage is that out loading movements during the busy harvest period are eliminated.

As discussed previously, CBH expect that the 2022/2023 harvest will result in approximately 538,226t of grain being transported to the Merredin Site. Based on the average payload of 54t, **Table 4** provides an estimate of the 22/23 harvest period truck movements, with and without the proposed emergency OBH and with comparison to

the previous 5-year average volumes and movements.

Table 4: Harvest Truck Movement Comparison

	5-year Average	22/23 Without Emergency OBH	22/23 With Emergency OBH
Tonnes Received (t)	462,770	538,226	538,226
Truck Payload (t)	54	54	54
Total Harvest Receival Movements	8,570	9,967	9,967
Total Harvest Out loading Movements	-	1,397	-
Total Harvest Movements	8,570	11,364	9,967

As shown, the movements for 2022/2023 regardless of the emergency OBH construction are expected to exceed the 5-year average, but the construction of the emergency OBH allows movements to be reduced in comparison to the scenario where the emergency OBH is not installed for the 2022/2023 harvest.

3.7. Haulage Route

As per the site plan provided in **Appendix A – CBH Concept Plan**, trucks can enter the site via the north or south entrance. All trucks exit the site via the exit onto Gabo Avenue.

Based on the road network, and the origin direction split provided by CBH, the following is assumed for movements to the CBH site:

- 83.4% of movements with eastern, southern and western origins will travel along Great Eastern Highway and north along Crooks Roads, then east along Goldfields Hwy to the north site entry.
- 16.60% of movements with northern origins will travel south along Merredin-Nungarin Rd, then west along Goldfields Hwy to the north site entry.
- Although there is a south entrance to the site, it is anticipated that truck movements would be quicker and less restricted if they travelled to the north entrance using the public roads rather than travelling through the site from the south entry on Gabo Avenue.

These movements are shown in **Figure 8**.

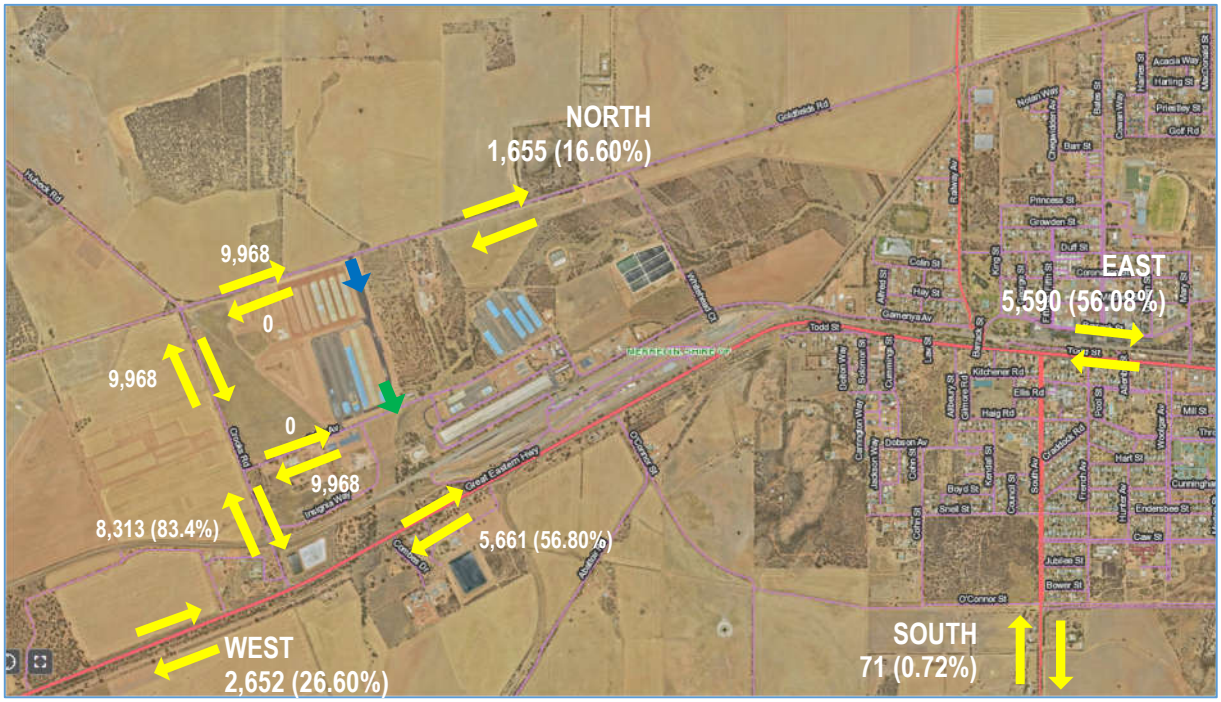

Figure 8: CBH Traffic Distribution

3.8. Peak Period Assessment

Although the harvest period is expected to occur over a period of approximately 2-3 months, it is known that there is a peak within this period. Specific data for Merredin was not available to define this peak period, but data from other CBH sites indicate that generally 80-85% of grain is received within 28 days.

For the purposes of assessing the peak period impacts, the following assumptions have been made:

- 85% of total grain tonnes are received within, and evenly distributed over 28 days.
- Truck deliveries occur over a 12-hour period, and 10% of all daily volumes are received within a peak hour.

Based on these assumptions:

- 8,473 truck movements will occur during the 28-day peak.
- 303 movements will occur each day of the 28-day peak.
- 30 movements will occur during a peak hour.

Figure 9 shows the peak daily / hourly movement volumes based on the previously discussed traffic distribution. Note that figures have been rounded up to the nearest whole number.

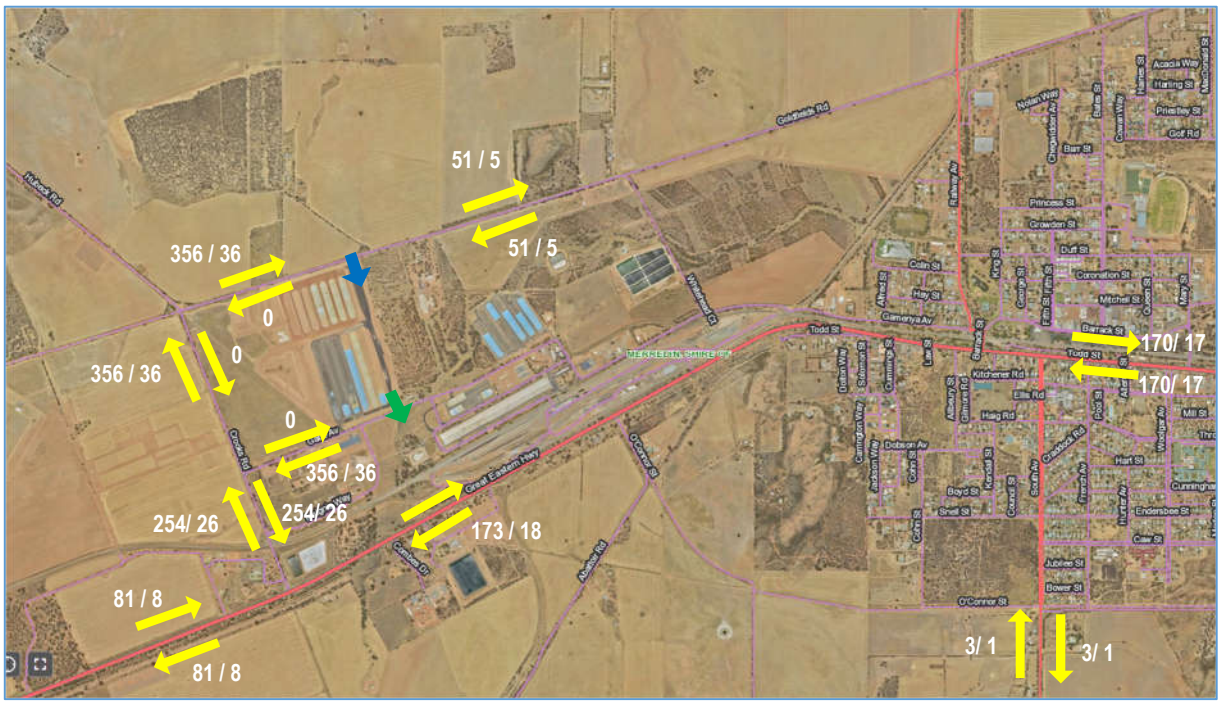

Figure 9: Peak Daily / Hour Volumes (CBH Only)

4. Traffic Impact Assessment

4.1. Assessment Years

The development is assessed based on current network condition (2022).

4.2. Impact on Roads

4.2.1. Road Minimum Widths

The sealed widths of the surrounding roads were checked against the Rural Road Minimum Width in accordance with Appendix A of the MRWA RAV assessment guideline. The comparison is shown below in **Table 5**.

Table 5: Rural Road Minimum Width

Road	Location	Existing AADT	Proposed AADT (Peak)	Speed (RAV)	RAV Status	Required Minimum Seal / Carriageway	Existing Sealed / Carriageway Width
Goldfields Highway	West of CBH Entry	50	406	100km/h	7.3	6.0m / 8.0m	6m/9m
Goldfields Highway	East of CBH Entry	50	152	100km/h	7.3	6.0m / 8.0m	6m/9m
Crooks Road	North of Gabo Avenue	50	406	100km/h	7.3	6.0m / 8.0m	6m/8m
Crooks Road	South of Gabo Avenue	50	558	100km/h	7.3	6.5m / 8.3m	**6m**/9m
Gabo Avenue	CBH Site Exit	50	406	100km/	7.3	6.0m / 8.0m	7m/10m

As shown, the minimum widths all comply with the exception of Crooks Road, south of Gabo Avenue. As per Appendix A of the MRWA RAV assessment guideline, the existing 6m seal width is less than the minimum required 6.5m for a 100km/hr speed.

Although the seal width does not comply, it is considered acceptable in this instance due to the following:

- The carriageway width exceeds the minimum requirement and advice from MRWA HVS in the past has been that meeting both seal and carriageway width requirements is desirable rather than essential
- Emergency bulkheads, and the additional truck movements, are only anticipated for 1 year only
- For comparison, it is estimated that for the 5-year average receivables proposed AADT during the peak is 484 (50 existing + 434 CBH traffic). Therefore, in normal conditions the road formation is acceptable
- Peak period is only over a 28-day period
- Due to the locations of the intersections and length of the road, it is expected that RAV speeds will be travelling slow.

4.3. Road Safety

The crash history of the adjacent road network (as previously outlined in **Section 2.6**) does not suggest any atypical safety issues in the existing road network. The additional traffic movements generated by the emergency bulkhead is not considered to increase the likelihood of crashes to unacceptable levels.

4.4. Safe Intersection Sight Distance – Site Exit

The Safe Intersection Sight Distance (SISD) is the minimum distance which should be provided on the major road at any intersection. SISD provides sufficient distance for a driver of a vehicle on the major road to observe a vehicle on a minor road approach moving into a collision situation (e.g. in the worst case, stalling across the traffic lanes) and to decelerate to a stop before reaching the collision point.

The SISD for the site exit along Gabo Ave is assessed based on the following parameters:

- An observation time of 3 seconds as per Austroads Part 3;
- A reaction time of 2.5 seconds;
- Deceleration coefficients for the purpose of SISD calculations are 0.36 for light vehicles and 0.28 for heavy vehicles; and
- Driver eye height is 2.4m for trucks and 1.1m for cars.
- Design speed for cars at 110km/h and trucks at 100km/h

Figure 10 and **Figure 11** show the sight distance available from the site exit looking west and east, respectively. The available sight distance has been measured at 575m to the west and more than 1km to the east, as shown in **Figure 12.**

Figure 10: Site Exit Looking West

Figure 11: Site Exit Looking East

Figure 12: Site Exit Sight Distance

Based on the sight distance parameters, **Table 6** shows the comparison between the required and available sight distances. As shown, the available sight distance is significantly greater than the minimum requirements.

Table 6: SISD at Site Exit

Location	Vehicle Type	Design Speed (km/h) (EB / WB)	Coefficient of Deceleration	Decision Time (s)	Longitudinal Grade (EB / WB)*	Required SISD for EB / WB Traffic (m)	Available SISD (m)	
							EB	WB
Site Exit	Trucks	100 / 100	0.28	3+2.5	0% / 0%	293 / 293	530	425
	Cars	110 / 110	0.36	3+2.5	0% / 0%	300 / 300	530	425

*Positive for through traffic travelling uphill and negative for through traffic travelling downhill. Grades are estimated only.

4.5. Entering Sight Distance – Site Exit

The Entering Sight Distance (ESD) is the minimum distance for driver of a RAV, entering a through road, having appropriate sight distance to see a sufficient gap in oncoming traffic that will allow a RAV, with greater length and lower acceleration capacity, to clear the intersection safely.

The ESD is assessed based on the following parameters:

- A reaction time of 4 seconds, and
- Deceleration coefficients of 0.28 (at 100km/hr).

The Entering Sight Distance (ESD) for existing and proposed access locations has been assessed in accordance with RAV Route Assessment Guideline (updated May 2022). A comparison of available and required ESD for RAV vehicles are summarised in **Table 7**.

Table 7: RAV Vehicle Entering Sight Distance

Location	Design Speed (km/h) (EB / WB)	Coefficient of Deceleration	Reaction Time (s)	Longitudinal Grade (EB / WB) *	Required ESD for EB / South WB (m)	Available ESD (m)	
						EB	WB
Site Exit	100 / 100	0.28	4	0% / 0%%	252 / 252	530	425

*Positive for through traffic travelling uphill and negative for through traffic travelling downhill. Grades are estimated only.

As shown, the ESD are sufficient to achieve minimum requirements in accordance with the MRWA RAV Assessment Guideline.

5. Conclusions

This Traffic Impact Statement has been prepared for the proposed Emergency OBH to be installed at CBH's existing Merredin West site. The TIS concluded:

- The estimated traffic generation can be accommodated within the capacity of the adjacent road network.
- The additional traffic generated by the site is not considered to increase the likelihood of crashes to unacceptable levels.
- The seal and carriageway widths of the surrounding road network generally meet the relevant RAV network requirements with the exception of the slight seal width deficiency in Crooks Road, south of Gabo Avenue, which is considered acceptable in this instance.
- There is sufficient sight distance at the site exit onto Gabo Ave.

Appendix A – CBH Concept Plan

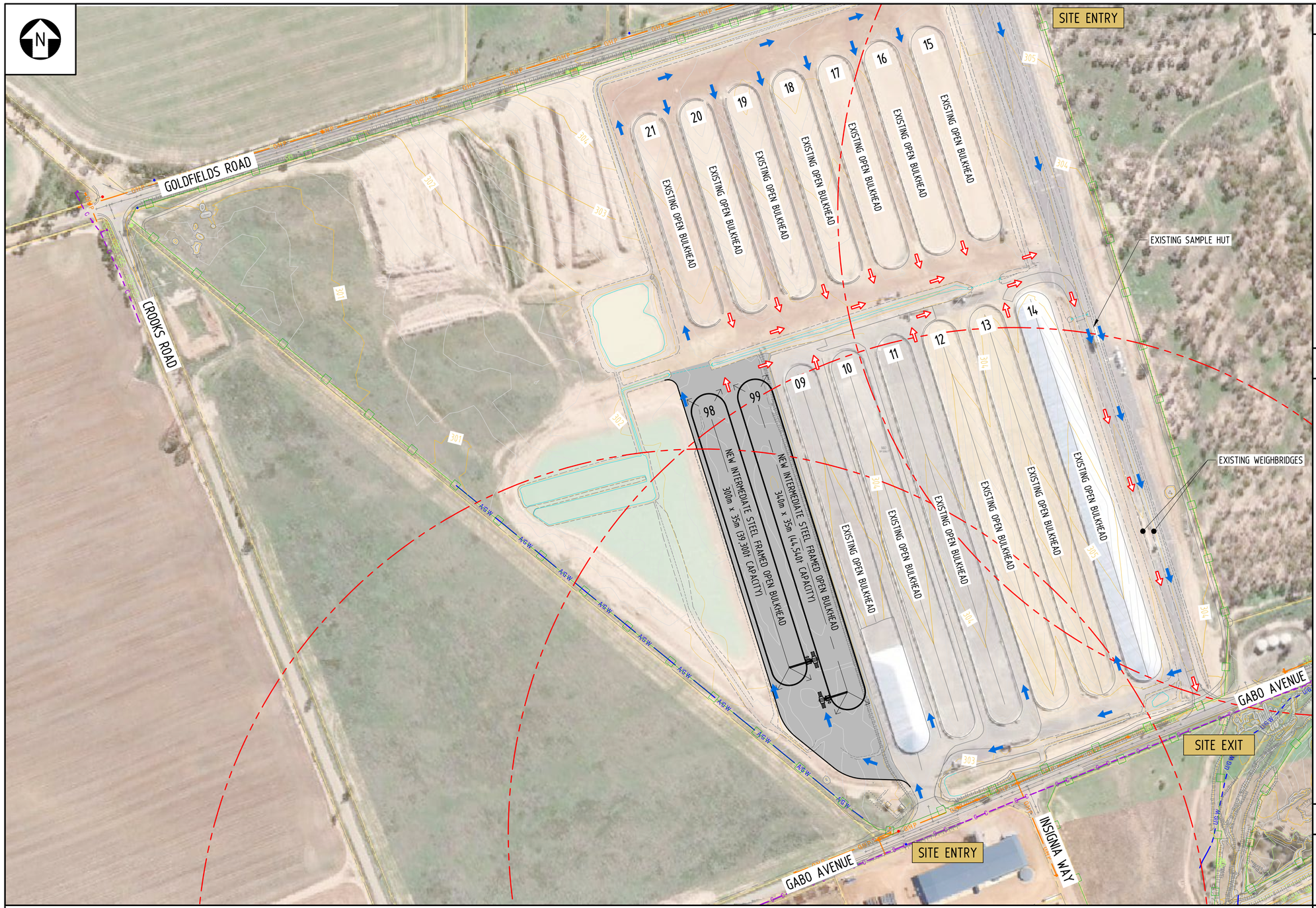

PLAN
1:2000

DRAWING LEGEND

- TRAFFIC MOVEMENTS - TRUCKS FULL
- TRAFFIC MOVEMENTS - TRUCKS EMPTY
- LOT BOUNDARIES
- CBH SITE BOUNDARY
- STORMWATER CULVERT (WITH HEADWALLS)
- O/H P — OVERHEAD POWER LINES
- U/G P — UNDERGROUND POWER CABLES
- C — UNDERGROUND COMMS CABLES
- A/G W — ABOVE GROUND WATER PIPES
- U/G W — UNDERGROUND WATER PIPES
- PROPOSED OPEN DRAINAGE
- EPA INDUSTRIAL/SENSITIVE LAND USE SEPARATION DISTANCE - 500m RADIUS

STORAGE CAPACITIES

EXISTING SITE STORAGE		
ORIGINAL SITE (NOT SHOWN)		465,800t
LOW STEEL FRAME OBH	(09)	40,000t
LOW STEEL FRAME OBH	(10)	40,000t
LOW STEEL FRAME OBH	(11)	40,000t
LOW STEEL FRAME OBH	(12)	40,000t
LOW STEEL FRAME OBH	(13)	40,000t
LOW STEEL FRAME OBH	(14)	40,000t
LOW STEEL FRAME OBH (TEMPORARY)	(15)	22,000t
LOW STEEL FRAME OBH (TEMPORARY)	(16)	22,000t
LOW STEEL FRAME OBH (TEMPORARY)	(17)	22,000t
LOW STEEL FRAME OBH (TEMPORARY)	(18)	22,000t
LOW STEEL FRAME OBH (TEMPORARY)	(19)	22,000t
LOW STEEL FRAME OBH (TEMPORARY)	(20)	22,000t
LOW STEEL FRAME OBH (TEMPORARY)	(21)	22,000t
TOTAL EXISTING STORAGE		859,800t

PROPOSED SITE STORAGE		
INT (1.8m) STEEL FRAME OBH	(98)	39,300t
INT (1.8m) STEEL FRAME OBH	(99)	44,540t
TOTAL PROPOSED STORAGE		83,840t

TOTAL SITE STORAGE	943,640t
TOTAL INCREASE IN STORAGE	83,840t

HATCHING LEGEND

AREA OF NEW WORKS 38,700m²

PRELIMINARY ISSUE
DO NOT USE FOR CONSTRUCTION
DATE 04.07.22

1:2000 @ A1
1:4000 @ A3
0 20 40 60 80 100 120 140 160 180 200 m

DO NOT SCALE FROM THIS DRAWING

CBHGROUP
ABN 29 256 604 947

CBH GROUP
LEVEL 6
240 ST GEORGE'S TERRACE
PERTH W.A. 6000
PH (08) 9237 9600
FAX (08) 9322 3942

REF DRAWING No.	REFERENCE DRAWING TITLE	REV	DATE	REVISION DESCRIPTION	BY	CHK'D	APP'D
-	-	A	04.07.22	ISSUED AS CHECK PRINT AND FOR REVIEW	PF		

SCALE 1:2000
SHEET A1
PROJECT
CONTRACT No

DRAWN	P. Forrest	28.06.22
CHECKED		
DESIGNED		
DESIGN APPR		
PROJECT APPR		

TITLE
MERREDIN
PRE-FEASIBILITY STUDY
2022 EMERGENCY STORAGE - WEST SITE
CONCEPTUAL LAYOUT - OPTION 1

DRG No 438-ENG-CI-DCO-0001 | SHEET 1 OF 1 | REV. A

MEMORANDUM

Project:	Merredin Emergency OBH (R-0430/KWINANA NORTH)			Project No:	RP21142.001
To:	Copy:	Name:	Organisation:	email:	
☒	☐	MICHAEL MUNDAY	CBH Group	Michael.Munday@cbh.com.au	
☐	☐				
☐	☐				
From:	BG&E Resources	Date:	28 July 2022	Total Pages:	6
Subject:	Merredin OBH Drainage Design Memo				

If you do not receive all pages, or some are unclear, please advise immediately

1 BACKGROUND

To cater for the increase harvest demand, CBH are proposing to expand their grain storage by constructing additional open bulkheads (OBH) at their Merredin facility, referred to herein as "the site".

The site is located approximately 3km west of Merredin town site near Great Eastern Highway in the Shire of Merredin. The site currently utilises a combination of 'A' type concrete silos and steel frame open bulkheads and contains infrastructure for marshalling, sampling and weighing.

The proposed emergency OBH storage expansion will be in an open field to the east of the site and is envisaged to include the following:

- Two new temporary open bulkheads contributing an additional 83,840t of storage.
- Access roads and associated earthworks/civil works for RAV07 truck configurations.
- Stormwater infrastructure (i.e., pavement trap drains, expansion of existing basin and subsoil drainage system)

The objective of this memo is to provide details on the stormwater management strategy and drainage design for the site.

2 STORMWATER MANAGEMENT STRATEGY

The stormwater management strategy is to cater for all surface runoff within the site, managing it to prevent flooding and damage to critical infrastructure. It will be based on the following philosophy:

- Surface water runoff for the 20% AEP (5-year ARI) event to be directed to an open drainage system.
- Surface water to be retained on-site up to the 1% AEP event with a controlled outflow limited to the 1% AEP event pre-development flow as per Shire of Merredin drainage requirement.
- Compliance with the CBH Emergency Build Specification, Design Specification for Civil Earthworks, Roads, and Drainage (TS10A) and Australian Rainfall & Runoff (ARR).

- Pre-development and post development hydrology analysis using the Rational Method and kinematic wave equation to estimate the time of concentration (Tc).
- Use of Intensity-Duration-Frequency (IDF) charts from Bureau of Meteorology for the location 331.4875 S, 118.2375E for stormwater design analysis (see **Figure 1).**

Figure 1 – Rainfall intensity chart

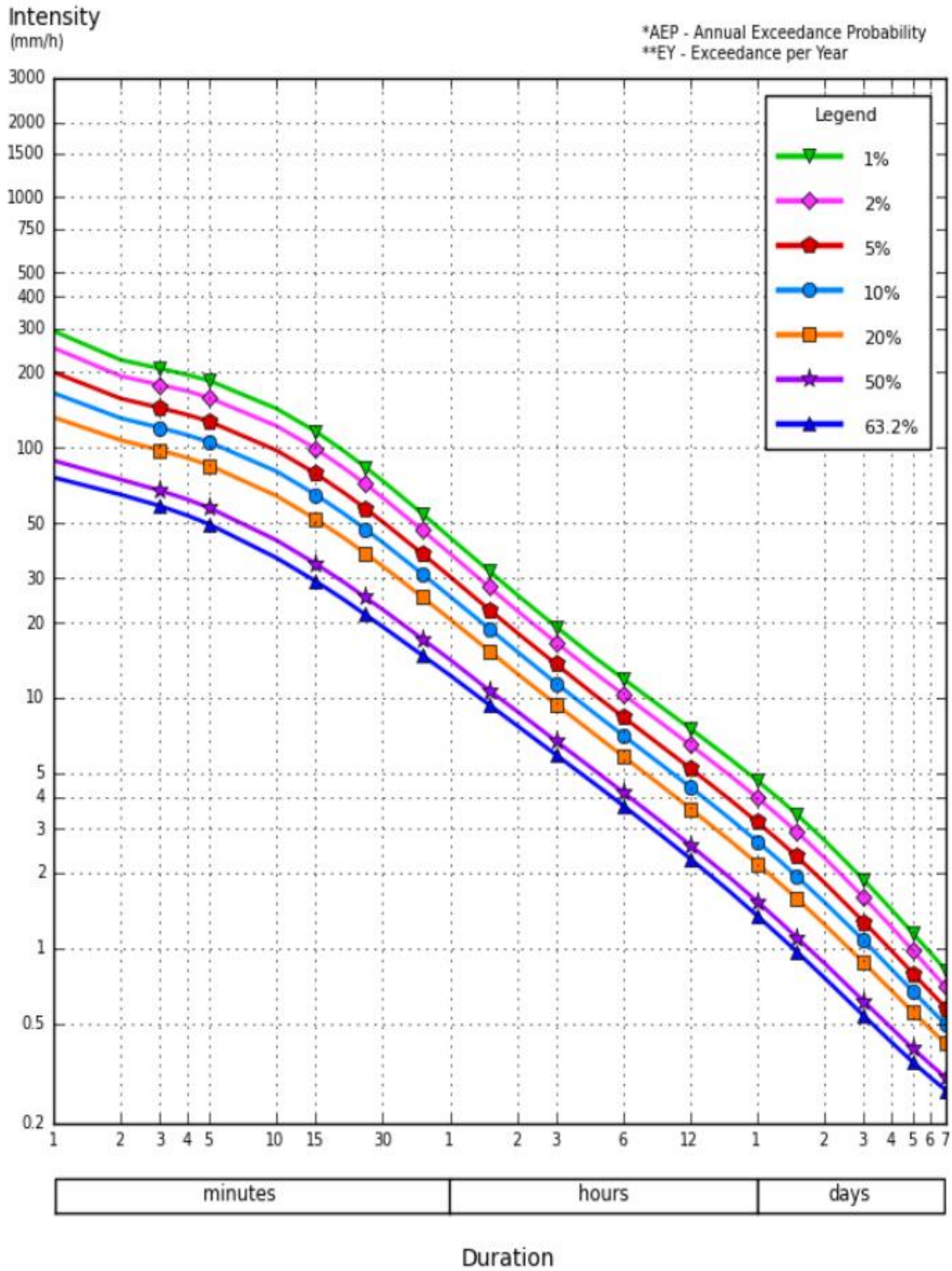

3 DESIGN PARAMETERS

Analysis of the stormwater and drainage was governed by the parameters and assumptions detailed in Table 1.

Table 1 - Stormwater management design parameters

Parameter	Value
General parameters	
Runoff Coefficients, C_5	Vegetated Ground: 0.37 (F_Y = 0.95) Paved Areas: 0. 0.84 (F_Y = 0.95)
Location	331.4875 S, 118.2375E
Design Life	2 years
Detention basin parameters	
Design ARI for On-site Detention	1% AEP
Design ARI for Pre-Development Outflow	1% AEP
Maximum depth of water	1.5 m
Freeboard to Infrastructure	0.3 m (min)
Freeboard to Pavement	0.15m (min)
Typical Side Slopes	1V:3H
Stormwater drain parameters	
Design ARI for Conveyance	20% AEP
Side Slopes	1V:3H
Maximum drain base width	1.0 m
Minimum Drain Depth	600 mm
Minimum Grade for Open Drains	0.3%
Manning's Co-efficient (earth channels), n	0.022
Manning's Co-efficient (pavement), n	0.012

4 EXISTING SURFACE HYDROLOGY

The study area slopes at an average grade of 0.7% from a central high point. All predevelopment runoffs are directed to an existing attenuation basin located south of the site.

A total area of 38,968m^2 has been analysed with due consideration given to the existing hydrologic regime and the proposed emergency bulkhead storage expansion works. This includes catchments 1, 2, 3 and 4 as shown in **Attachment 1**. The predevelopment peak-flow rate for a 1% AEP storm event was estimated to be 0.34m^3/s.

5 POST-DEVELOPMENT HYDROLOGY

The proposed OBH storage expansion will have a high point at the centre, which directs runoff to the east and west via pavement trap drain and overland flow. The existing open drains along east and west collect and convey runoffs to the existing basin as shown in **Attachment 1**. The existing basin will require expansion as detailed in section 5.1. A subsoil system is also provided at the new pavement and existing sealed pavement interface to protect the existing pavement from failure as explained in section 5.4.

The site is divided into 4 catchments for post development analysis as shown in **Attachment 1** with details provided in **Table 3**.

Table 3 - Catchment details

Catchments	Discharge point	Runoff Coefficients, C_5
1	existing southern basin	0.84
2	existing southern basin	0.84
3	existing western open drain	0.84
4	existing eastern open drain	0.84

5.1 Basin

All post-development flows are directed to the existing basin as shown in **Attachment 1**. The proposed basin extension is designed to cater for 1% AEP storm event as per the Shire of Merredin drainage requirement. The existing basin is to be expanded maintaining the existing spillway level at RL 301.00. The storage volume is provided by assuming an outflow limited to 1% AEP pre-development flow rates. The design storage volume and post development stormwater analysis results are shown in **Table 4.** Additional storage in the basin is provided to balance the cut and fill requirement.

Table 4 Detention basin sizing

Basin	Catchments	Catchment Area (m^2)			Additional Volume required (m^3)	Additional Volume provided (m^3)
		Paving	Landscape	Total		
Basin1 (Extension of existing basin)	Catchment 1, 2, 3 and 4	38,962	0	38,962	950	1260

5.2 Open Drain

The proposed open drains associated with emergency OBH expansion are designed for 20% AEP storm events. **Table 5** shows the estimated inflow from the proposed OBH storage expansion and drain capacity. Shallow sections of drain at the inlet to culverts 1 and 2 were considered in the analysis.

Table 5 Open drain analysis

Drain profile	Drain section at culvert 1	Drain section at culvert 2
Depth	0.6	1.05 (excluding 0.45m freeboard)
Side Slope:	Left:1 in 4, right:1 in 6	Left:1 in 7, right:1 in 8
Longitudinal grade	0.5%	0.7%
Base width	1.8m	2m
Drain capacity	4.715 m^3/s	7.394 m^3/s
Estimated runoff from proposed OBH storage expansion	0.19 m^3/s	0.24 m^3/s
Additional flow respective to pre-development flow rates	0.16 m^3/s	0.158 m^3/s

The estimated runoff from the proposed OBH storage expansion is less than 2.0% of existing open drain capacity. Hence, the proposed OBH storage expansion will not have significant effect on the existing open drains.

5.3 CULVERTS

While there was no information available for the exiting culverts. It is has been assumed that the culverts are designed in accordance with TS10A for 5% AEP event and already caters for the expansion area given the low permeability soil.

5.4 SUBSOIL DRAINAGE

The proposed temporary OBH storage expansion will need to tie into the existing sealed pavement. A pavement trap drain is to be formed at the interface between new and existing pavement with a longitudinal grade of 0.4%. A subsoil drainage is proposed as detailed below to reduce stormwater ponding and protect existing pavement from failure. The subsoil drainage and pavement trap drain

have a combined capacity of 0.159m^3/s, which is greater than the maximum estimated inflow of 0.1m^3/s.

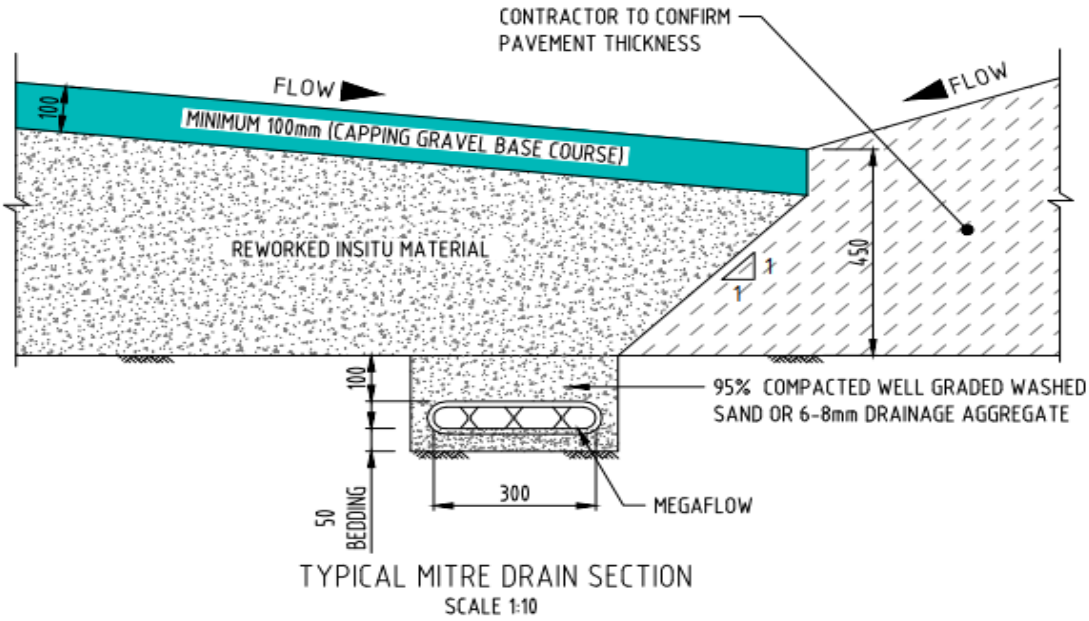

6 CONCLUSION

The stormwater drainage system has been designed in accordance with the requirements of CBH Emergency Build Specification, Design Specification for Civil Earthworks, Roads and Drainage (TS10A), Australian Rainfall & Runoff (ARR) and Shire of Merredin drainage requirement.

The detailed design has provided a storage volume of 1260m^3 which is greater than the minimum storage required of 950m^3. The existing basin expansion was designed to cater for 1% AEP event, assuming an outflow equivalent to 1% AEP pre-development flow rates, thereby maintaining the pre-development functionality of the basin.

Existing drain profiles are maintained and there is sufficient capacity to convey additional runoff from the proposed OBH storage expansion for a 20% AEP event.

EXISTING OPEN BULKHEAD

EXISTING OPEN BULKHEAD

EXISTING OPEN BULKHEAD

EXISTING OPEN BULKHEAD

EXISTING OPEN BULKHEAD

EXISTING OPEN BULKHEAD

EXISTING OPEN BULKHEAD

EXISTING OPEN BULKHEAD

EXISTING OPEN BULKHEAD

INSIGNIA WAY

SITE ENTRY

12

11

10

09

08

07

PAVEMENT TRAP DRAIN

PROVIDE SUBSOIL DRAINAGE, 300mm MEGAFLO OR APPROVED SUBSOIL DRAINAGE SYSTEM UNDER PAVEMENT TRAP DRAIN

PROVIDE SUBSOIL DRAINAGE, 300mm MEGAFLO OR APPROVED SUBSOIL DRAINAGE SYSTEM UNDER PAVEMENT TRAP DRAIN

A DSE-0001

B DSE-0001

C DSE-0001

D DSE-0001

CATCHMENT 3
AREA: 12,779m2

NEW INTERMEDIATE STEEL FRAMED OPEN BULKHEAD 340m x 35m (44,540t CAPACITY)

CATCHMENT 4
AREA: 14,890m2

CATCHMENT 1
AREA: 5,606m2

TERMEDIATE STEEL FRAMED OPEN
AD 300m x 35m (39,300t CAPACITY)

CATCHMENT 2
AREA: 5,687m2

303.0 303.5 304.0 302.5

A&W

GABO AVENUE

EXISTING EASTERN DRAIN

EXISTING WESTERN DRAIN

EXISTING BASIN

1% AEP
REQUIRED STORAGE: 950m3
STORAGE PROVIDED: 1260m3

EXISTING SPILLWAY
RL 301.00m

PLAN
1:1000

CIVIL NOTES

1. ALL DIMENSIONS ARE IN METRES UNLESS NOTED OTHERWISE.
2. ALL TREES AND EXISTING SERVICES TO BE PROTECTED AT ALL TIMES.
3. SITE TO BE STRIPPED 0.1m AND STOCKPILED.
4. FINAL EARTHWORKS LEVEL SHOWN, CONTRACTOR SHALL CONSTRUCT BULK EARTHWORKS/BOXING TO 300mm BELOW FINISHED SURFACE WHERE BASECOURSE CEMENT STABILISATION ALONG DOG ROAD UNLESS INSTRUCTED OTHERWISE. CONTRACTOR SHALL ENSURE THAT SUBGRADE DOES NOT POND AND GRADES SURFACE WATER AWAY.
3. ALL EARTHWORKS AND PAVEMENTS TO BE COMPLETED IN ACCORDANCE WITH CBH EMERGENCY OPEN BULKHEAD DESIGN SPECIFICATIONS AND GUIDELINES
4. EMERGENCY STORAGE PAVEMENTS MUST NOT BE TRAFFICKED DURING AND FOLLOWING WET WEATHER UNTIL THE PAVEMENT AND SUBGRADE HAS DRIED SUFFICIENTLY TO SUPPORT REQUIRED LOADS.
5. REGULAR MAINTENANCE OF UNSEALED PAVEMENTS IS REQUIRED TO MAINTAIN A TRAFFICABLE SURFACE AND REDUCE WATER SCOUR. MAINTENANCE IS EXPECTED TO COMPRISE OF REGULAR GRADING TO MAINTAIN SURFACE SHAPE. POTHOLES AND RUTS SHOULD BE BOXED OUT TO A MINIMUM 100mm DEPTH WITH VERTICAL SIDES AND REPLACED WITH FRESH COMPACTED PAVEMENT MATERIAL (CEMENT STABILISED ON DOG ROADS)
6. FOR SITE STORMWATER MANAGEMENT AND DETAILS REFER TO STORMWATER REPORT 438-R-0430-1-CI-RPT-001.
7. ALL OPEN DRAINS TO BE GRADED MINIMUM 1 IN 300.
8. REFER TO CBH EMERGENCY STORAGE SPECIFICATION FOR ADDITIONAL CLARITY ON CONSTRUCTION METHODS AND KNOWN RISKS.
9. SUMP AND SPILLWAY ARRANGEMENT WILL REQUIRE REGULAR DEWATERING OF THE EXISTING EXPANDED AND PROPOSED BASIN TO ENSURE CORRECT OPERATION.
10. ALL OPEN DRAINS, BASIN AND CULVERTS TO BE MAINTAINED TO ENSURE STORMWATER CONVEYANCE.

CIVIL LEGEND

- CADASTRAL BOUNDARIES
- CBH BOUNDARY
- OPEN OR CHANNEL DRAINAGE CENTRELINE
- PAVEMENT OR CHANNEL DRAINAGE
- VEGETATION
- PROPOSED STORMWATER FLOWPATH
- EXISTING STORMWATER FLOWPATH
- EXISTING SURFACE CONTOUR (0.2m INTERVAL)
- 315.00 — FINISHED SURFACE CONTOUR (0.1m INTERVAL)
- PROPOSED GUIDE POSTS

1:1000 @ A1
1:2000 @ A3
0 10 20 30 40 50 60 70 80 90 100 m

DO NOT SCALE FROM THIS DRAWING

CBHGROUP
ABN 29 256 604 947

CBH GROUP
LEVEL 6
240 ST GEORGE'S TERRACE
PERTH W.A. 6000
PH (08) 9237 9600
FAX (08) 9322 3942

REF DRAWING No.	REFERENCE DRAWING TITLE
438-ENG-CI-DSE-0002	TYPICAL SECTIONS AND DETAILS
438-ENG-CI-DSE-0001	TYPICAL SECTIONS AND DETAILS

REV	DATE	REVISION DESCRIPTION	BY	CHK'D	APP'D
A	27.07.22	ISSUED FOR CBH REVIEW	PAN	RH	VP

SCALE: AS SHOWN
SHEET: A1
PROJECT: -
CONTRACT No:

DRAWN	GVD	26.07.22
CHECKED	RH	26.07.22
DESIGNED	SK	26.07.22
DESIGN APPR	VP	26.07.22
PROJECT APPR		

TITLE
MERREDIN
2022 EMERGENCY STORAGE
GENERAL ARRANGEMENT PLAN
EARTHWORKS, PAVEMENT AND DRAINAGE

DRG No: 438-ENG-CI-DGA-0001
SHEET: 1 OF 1
REV.: A

A9247
OCR2018 1581

COPY

SHIRE OF
MERREDIN
INNOVATING THE WHEATBELT

SCANNED
DATE 2017/18
INITIAL

Mr Tim Dolling
Cooperative Bulk Handling
GPO Box L886
Perth WA 6842

Dear Tim

RE: Temporary Development Approval MDPA014(2018) - Lot 503 Gabo Avenue Merredin.

Thank you for your recent application for Development Approval for proposed works at Lot 503 Gabo Avenue Merredin, incorporating;

- **an internal gravel road; and**
- **9 open bulkhead storage facilities.**

In response I wish to advise you that your application for Development Approval was considered by Council at its ordinary meeting held on Tuesday 17th July 2018, where it resolved as follows;

"That:

1. ***a Temporary Development Approval valid for a period of 12 months from the date of this determination be granted to Co-operative Bulk Handling (CBH) for proposed works at Lot 503 Gabo Avenue, Merredin, as outlined in attachment 18.1A, incorporating:***

   a. **an internal gravel road; and**
   b. **9 open bulkhead storage facilities.**

   This Temporary Development Approval is subject to the following conditions:
   a. ***The provision of an asphalt seal to the turning zones along Goldfields Road used to access Lot 503 Gabo Avenue, Merredin, to the satisfaction of the local government;***
   b. ***CBH meeting the additional cost of road maintenance as calculated by applying the 'User Guide Estimating the Incremental Cost Impact on Sealed Local Roads from Additional Freight Tasks' to all local roads used in the operation of the Merredin CBH facility; and***

c. ***CBH enters in to discussions with Main Roads WA (MRWA) on the potential impact of this application on MRWA's road network.***

ADVICE NOTES:

- ***the granting of this Temporary Development Approval does not constitute a Building Permit and that an application for a Building Permit must be lodged with the Shire of Merredin and be approved before any work can commence on site.***

- ***the applicant is advised that, in order that the development approval remains valid, a fresh Temporary Development Approval application will be required on an annual basis. When Council determines the next Temporary Development Approval it will need to determine, amongst other items, whether the road system used by the facility is in need of additional works resulting from the CBH Activities, in which case Council may consider imposing a condition to address the issue."***

I trust that this clarifies Councils position in relation to this matter. If you have any questions please do not hesitate to contact me at the Shire office.

Yours faithfully

Peter Zenni
Executive Manager Development Services

18th July 2018

Local Planning Scheme No. 6
Schedule 9
Notice of Determination on Application for Planning Approval

Planning and Development Act 2005.

Shire of Merredin

Determination on Application for Planning Approval

Location *: Lot 503 Gabo Avenue*, Merredin WA 6415, Temporary (valid for a period of 12 months from the date of this determination) Development Approval MDPA 014 (2018)

Lot: 503 Plan/Diagram:

Vol. No: Folio No:

Application Date: 11/7/2018 Received On: 11/7/2018

Description of proposed development: Temporary (valid for a period of 12 months from the date of this determination) Development Approval granted for works/use incorporating;

a. ***An internal gravel road; and***
b. ***9 open bulkhead storage facilities.***

The application for planning approval is:

✓ granted on a temporary (valid for a period of 12 months from the date of this determination) basis, subject to the following conditions;

Conditions:

1. **The provision of an asphalt seal to the turning zones along Goldfields Road used to access Lot 503 Gabo Avenue, Merredin, to the satisfaction of the local government;**

2. **CBH meeting the additional cost of road maintenance as calculated by applying the 'User Guide Estimating the Incremental Cost Impact on Sealed Local Roads from Additional Freight Tasks' to all local roads used in the operation of the Merredin CBH facility; and**

3. **CBH enters in to discussions with Main Roads WA (MRWA) on the potential impact of this application on MRWA's road network.**

Note 1: the development is subject to a Temporary (valid for a period of 12 months from the date of this determination) Development Approval.

Note 2: in order that the development approval remains valid, a fresh Temporary Development Approval application will be required on an annual basis. When Council determines the next Temporary Development Approval it will need to determine, amongst other items, whether the road system used by the facility is in need of additional works resulting from the CBH activities, in which case the Council may consider imposing a condition to address the issue.

Note 3: that the granting of this Temporary Development Approval does not constitute a Building Permit and that an application for a Building Permit must be submitted to the Shire of Merredin and be approved before any work can commence on site.

Note 4: If an applicant is aggrieved by this determination there is a right of review by the State Administrative Tribunal in accordance with Part 14 of the Planning and Development Act 2005.

Signed: Dated: 18/7/2018

Piotr Zenni – Executive Manager Development Services

For and on behalf of the **Shire of Merredin**

PARTS LIST (PER UNIT)

ITEM	DESCRIPTION	WIDTH	LENGTH	QTY	CBH DRG OR SUPPLIER PART No	PROCESS	SAP Code	MASS Kg	TO DETAIL	SURFACE TREATMENT	COATING S
1	1.2m OBH FRAME ASSEMBLY			3	S-056-A0001	FITTING	N/A	18.9	Yes	N/A	N/A
2	DIA 20 STAKE		420	6	S-014-A0000	FIELD KIT	TBA	1.2	Yes	GALVANIZE	N/A
3	CUSTOM ORB ZINC ALUME 0.47mm		3200	2	ROOFMART	FITTING	102860	1.4	No		
4	SCREW HI-TEK HEX 14-20x22mm WITH SEAL			18		FIELD KIT	501922	0.0	No	ZP	N/A
5	1.6PGI	300	3000	1	S-056-P0011	FAB SHEET	108015	11.4	Yes	N/A	N/A
6	5PL	130	257	3	S-056-P0012	FAB PROFILE	107901	1.3	Yes	GALVANIZE	N/A
7	TIMBER SAWN KARRI STRUC3 75MMx50MMx3M	75	3000	1	S-056-P0014	FITTING	108594	6.2	No	N/A	N/A
8	M10 x 120 GALV BOLT			3		FIELD KIT	109251	0.1	No	N/A	N/A
9	M10 GALV. NUT			3		FIELD KIT	109251	0.0	No	N/A	N/A
10	M10 GALV FW			3		FIELD KIT	110164	0.0	No	N/A	N/A
11	O.B.H CONSTRUCTION SPECS. 2010				DOC'S #899017	FIELD KIT					

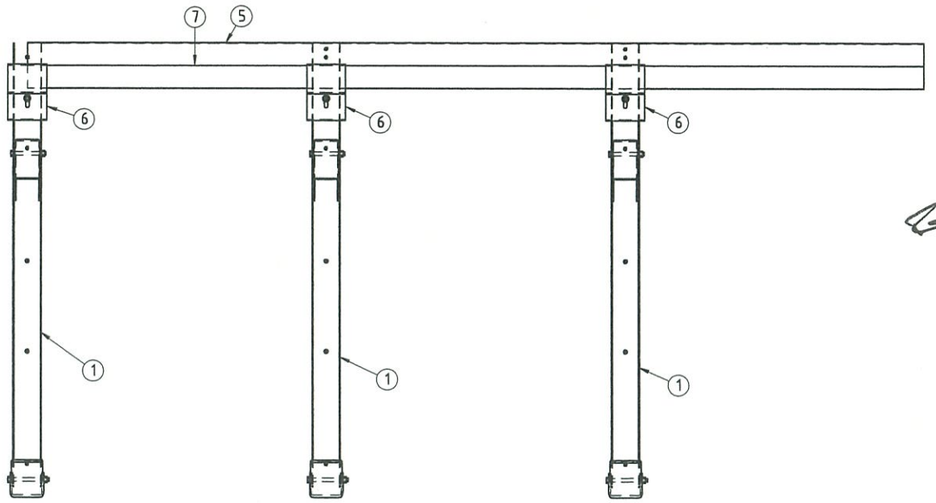

SECTION B-B

SHIRE OF MERREDIN
This plan forms part of Planning Consent
MDPA 014 (2018)
Chief Executive Officer
Date 18/7/2018

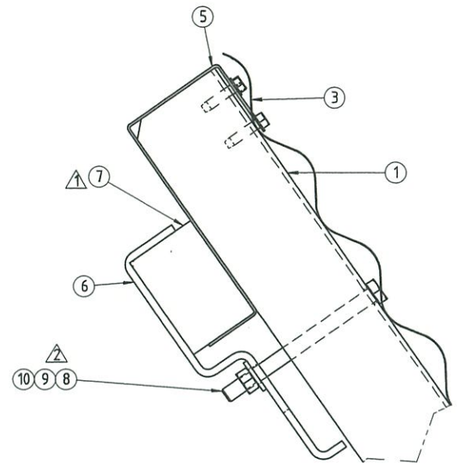

DETAIL 1

WORK POINT
LAYOUT FOR ALL BULKHEADS
FROM THIS POINT.

BULKHEAD WIDTH REF. TO SITE PLAN

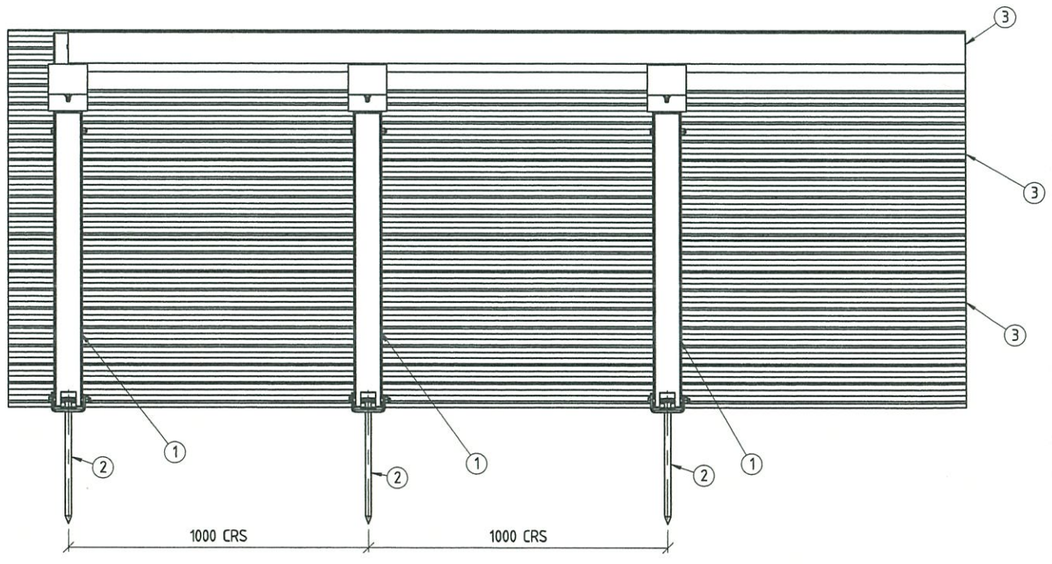

DETAIL 1

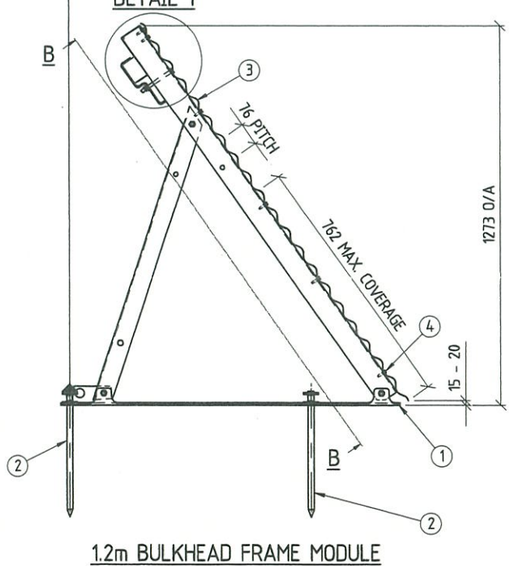

1.2m BULKHEAD FRAME MODULE

OPEN BULKHEAD
CONSTRUCTION SPECIFICATIONS 2010
DOC'S #899017
MANUAL TO BE SUPPLIED TO
CONTRACTORS ERECTING BULKHEADS

GENERAL NOTES:
1. ALL STEELWORKS, WELDING & FABRICATION TO CONFORM WITH CURRENT S.A.A CODES AS1554 CAT SP.
2. REMOVE ALL BURRS & SHARP EDGES.
3. ALL WELDS TO BE 6 FILLET UNO & 3 FILLET ON 3PL.
4. ALL FASTENERS TO BE GR.4.6 ZP U.N.O.
5. ALL MILD STEEL PLATE & SHEET TO BE MIN. GR.250 U.N.O.
6. ALL STRUCTURAL STEEL TO BE MIN. GR.300 U.N.O.
7. ALL GALVANISED STEEL TO BE IN ACCORDANCE WITH AS1397 AND OF GRADE G2Z275 OR EQUIV.

ASSIGNED TO:	
DATE COMPLETED:	
QTY. COMPLETED:	
SIGNATURE:	
SURFACE TREATMENT:	N/A
COATING SPEC:	N/A
TOTAL MASS:	88.4 kg

CBH ENGINEERING
CBH HEAD OFFICE
30 DELHI STREET, WEST PERTH W.A 6005
PH (08) 9237 9600 FAX (08) 9322 3942
CBH ENGINEERING
40 MIGUEL ROAD, BIBRA LAKE W.A 6163
PH (08) 9236 5350 FAX (08) 9236 5370

DO NOT SCALE FROM THIS DRAWING - ASK!

REF DRG No.	REFERENCE DRAWING TITLE

REV	DATE	REVISIONS	BY	CHK	APP
3	29.07.14	PARTS LIST MODIFIED	AME	CBH	CBH
2	04.11.13	BOLT SAP CODE CHANGED AS PER NCR#1073	DRH	RM	RM
1	6.09.12	NCR#0443 ITEM 7 CHANGED, FRP - TIMBER	DRH	CBH	CBH
0	14/06/2012	ISSUED FOR CONSTRUCTION	AME	VP	ML

DESIGNER	CBH	16/06/2011
DRAWN	AME	14/06/2012
CHECKED	VP	16/06/2011
APPROVED	ML	16/06/2011

DRAWING TITLE
1.2m PORTABLE BULKHEAD (TIMBER LOCK)
FLAT BOTTOM FRAME
TARP CLAMPING, TENSIONING
GENERAL ARRANGEMENT

SITE: VARIOUS
SIZE: A1
PROJECT: STANDARD
DRAWING No: S-056-A0000
SHEET: 1 OF 1
REV.: 3

ISSUED FOR CONSTRUCTION - 10/04/2018

PARTS LIST (PER UNIT)

ITEM No	DESCRIPTION	WIDTH	LENGTH	QTY	CBH DRG OR SUPPLIER PART No	PROCESS	SAP Code	MASS Kg	TO DETAIL	SURFACE TREATMENT	COATING SPEC.
1	1.8m OBH FRAME ASSEMBLY			3	S-119-A0001	FITTING	N/A	36.5	Yes	N/A	N/A
2	DIA 20 STAKE		420	9	S-014-A0000	FIELD KIT	TBA	1.1	Yes	GALVANIZE	N/A
3	1.6PL PGI	300	3000	1	S-119-P0011	FAB SHEET	108015	11.4	Yes	N/A	N/A
4	6PL	130	257	1	S-119-P0012	FAB PROFILE	107901	1.6	Yes	GALVANIZE	N/A
5	TIMBER SAWN KARRI STRUCT 75MMx50MMx3M	75	3000	1	S-119-P0014	FITTING	108594	6.2	No	N/A	N/A
6	CUSTOM ORB ZINC ALUME 0.48mm		3200	3	ROOFMART	FITTING	102860	1.4	No	N/A	N/A
7	SCREW HI-TEK HEX 14-20x22mm WITH SEAL			7		FIELD KIT	501922	0.0	No	ZP	N/A
8	M10 x 120 GALV BOLT			1		FIELD KIT	109251	0.1	No	N/A	N/A
9	M10 GALV. NUT			1		FIELD KIT	109251	0.0	No	N/A	N/A
10	M10 GALV FW			1		FIELD KIT	110164	0.0	No	N/A	N/A
11	O.B.H CONSTRUCTION SPECS. 2009				DOC'S #770663	FIELD KIT					

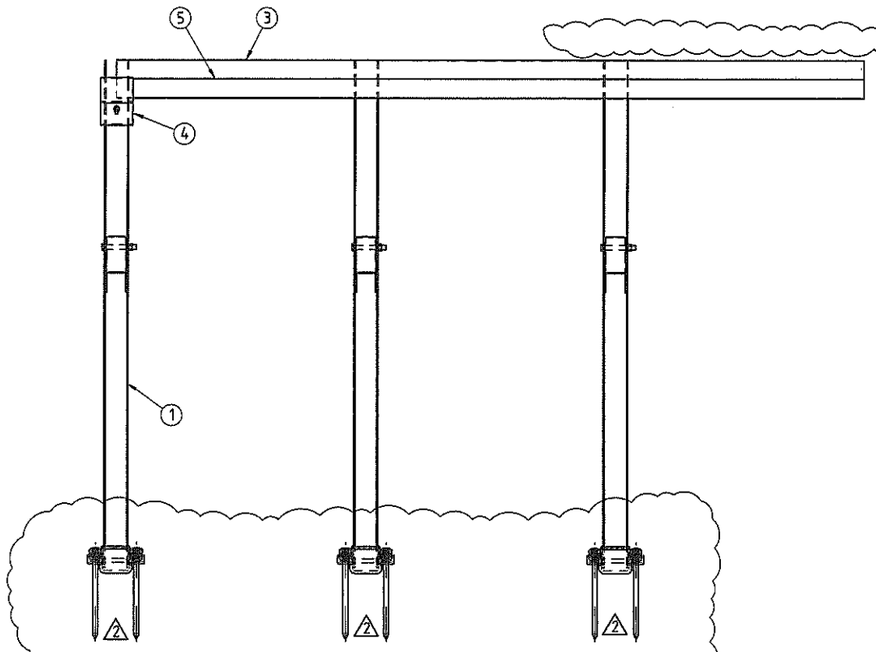

SECTION B-B

SHIRE OF MERREDIN
This plan forms part of Planning Consent
MD PA 014 (2018)
Chief Executive Officer
Date 18/7/2018

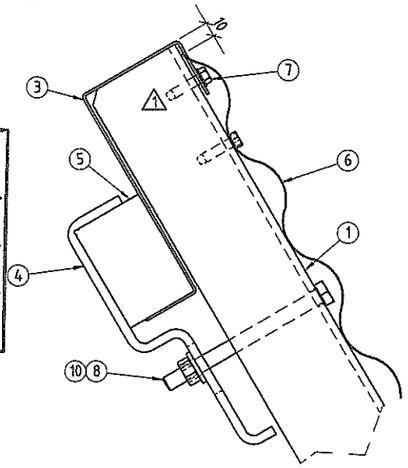

DETAIL 1

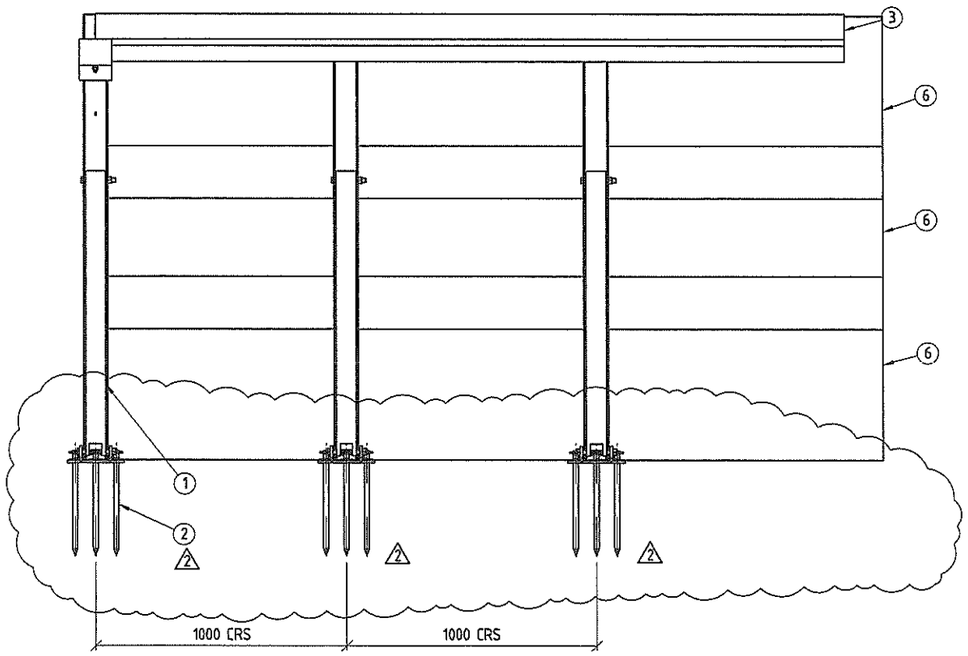

DETAIL 1

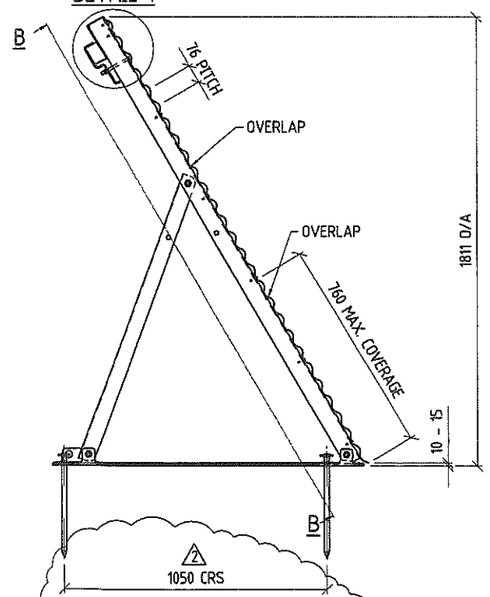

1.8m BULKHEAD FRAME MODULE

CIVIL WORKS NOTE:
ALL OBH FRAMES SHALL BE SUPPORTED BY CEMENT STABILISED FOUNDATIONS AS PER S000-ENG-CI-STD-0002 SECTION 'A'

GENERAL NOTES (UNLESS NOTED OTHERWISE):
1. ALL STEELWORKS, WELDING & FABRICATION TO CONFORM WITH CURRENT AS1554 CAT SP.
2. REMOVE ALL BURRS & SHARP EDGES.
3. ASSEMBLY TO BE CONTINUOUS FULLY WELDED
   WITH MINIMUM 3mm FILLET FOR 3mm PLATE
   6mm FILLET FOR 4mm TO <12mm PLATE
   8mm FILLET FOR 12mm TO <20mm PLATE
   10mm FILLET FOR 20mm TO <32mm PLATE
4. ALL FASTENERS TO BE GR.8.8/TB
5. ALL STEEL PLATE & SHEET TO BE MIN. GR.250
6. ALL STRUCTURAL STEEL TO BE MIN. GR.300
7. ALL GALVANISED STEEL TO BE IN ACCORDANCE WITH AS1397 AND OF GRADE G2Z275 OR EQUIV.

ASSIGNED TO:	
DATE COMPLETED:	
QTY. COMPLETED:	
HOURS TAKEN:	
EST. HOURS:	
SIGNATURE:	
SURFACE TREATMENT:	N/A
COATING SPEC:	N/A
TOTAL MASS:	143.4 kg

CBH GROUP HEAD OFFICE
30 DELHI STREET, WEST PERTH W.A 6005
PH (08) 9237 9600 FAX (08) 9322 3942

DO NOT SCALE FROM THIS DRAWING - ASK!

REF DRG No.	REFERENCE DRAWING TITLE

REV	DATE	REVISIONS	BY	CHK	APP
2	23.06.2018	3 MORE STAKES ADDED AS PER ENG REQUEST	VP	MR	NH
1	16.04.2018	ORB CRECTED, TEK SCRWS ADDED, BRKET TO 6mm	DMS	DD	PC
0	31/10/2017	DESIGN BASED ON CERTIFIED ORG STD-034-0020	TTW	VP	PC

DRAWN	TTW	31/10/2017
CHECKED	VP	31/10/2017
ENGINEER	DS	31/10/2017
APPROVED	PC	31/10/2017

DRAWING TITLE
1.8m PORTABLE BULKHEAD (TIMBER LOCK)
FLAT BOTTOM FRAME
TARP CLAMPING, TENSIONING
GENERAL ARRANGEMENT

SITE: VARIOUS
SIZE: A1
PROJECT: STANDARD
DRAWING No: S-119-A0000
SHEET: 1 OF 2
REV.: 2

TOTAL SITE STORAGE	920,800 t
TOTAL OPEN STORAGE	680,400 t
TOTAL SEALED STORAGE	240,400 t
LAND ACQUISITION	0.0ha

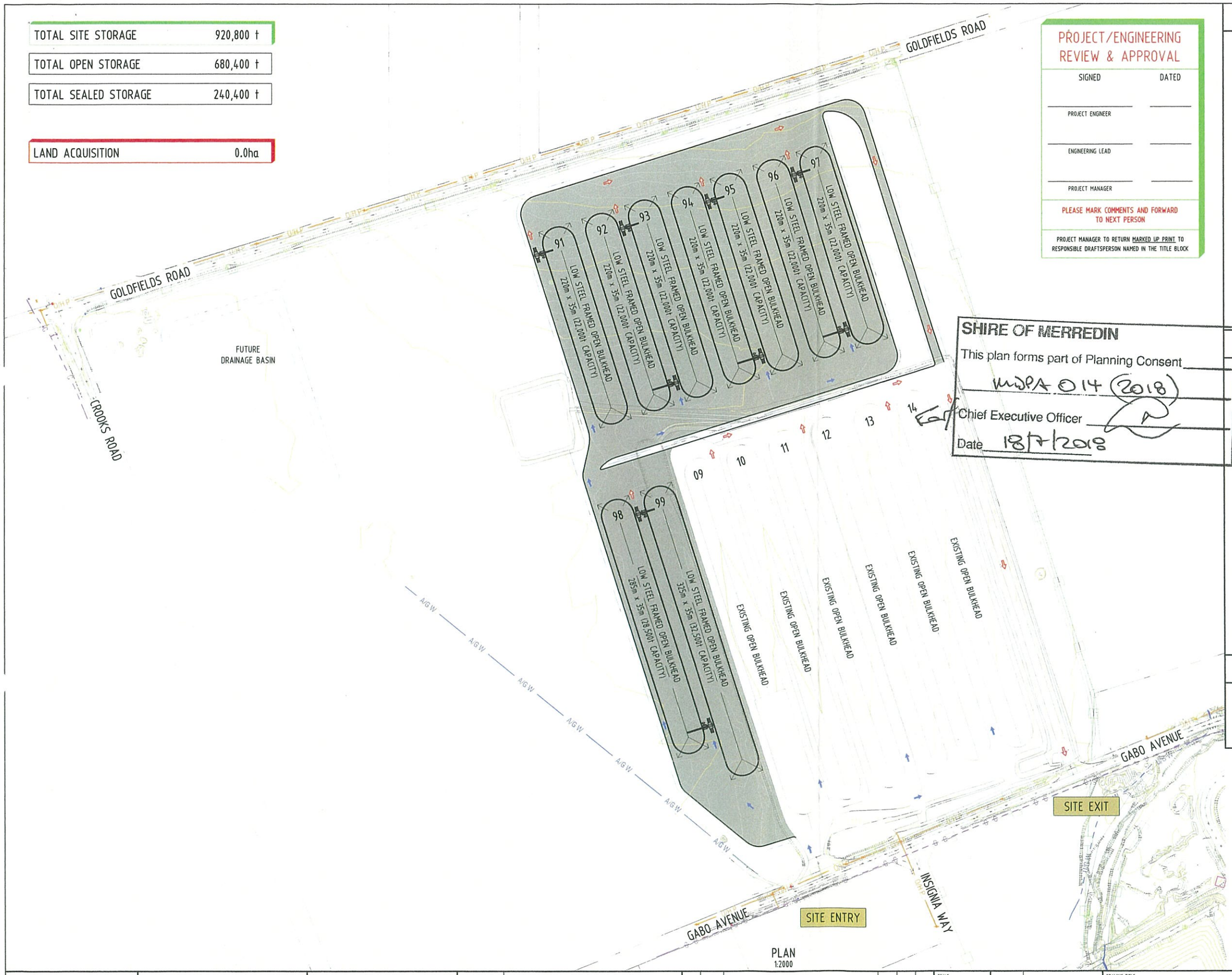

PLAN
1:2000

PROJECT/ENGINEERING REVIEW & APPROVAL

SIGNED	DATED
PROJECT ENGINEER	
ENGINEERING LEAD	
PROJECT MANAGER	

PLEASE MARK COMMENTS AND FORWARD TO NEXT PERSON

PROJECT MANAGER TO RETURN MARKED UP PRINT TO RESPONSIBLE DRAFTSPERSON NAMED IN THE TITLE BLOCK

SHIRE OF MERREDIN
This plan forms part of Planning Consent
MUPA 014 (2018)
Chief Executive Officer
Date 18/7/2018

DRAWING LEGEND

- TRAFFIC MOVEMENTS - TRUCKS FULL
- TRAFFIC MOVEMENTS - TRUCKS EMPTY
- LOT BOUNDARIES
- CBH SITE BOUNDARY
- STORMWATER CULVERT (WITH HEADWALLS)
- OHP — OVERHEAD POWER LINES
- UGP — UNDERGROUND POWER CABLES
- C — UNDERGROUND COMMS CABLES
- AGW — ABOVE GROUND WATER PIPES
- UGW — UNDERGROUND WATER PIPES
- PROPOSED OPEN DRAINAGE
- PROPOSED DRAINAGE BASIN

STORAGE CAPACITIES

EXISTING SITE STORAGE		
ORIGINAL SITE (NOT SHOWN)		465,800t
LOW STEEL FRAME OBH	(09)	40,000t
LOW STEEL FRAME OBH	(10)	40,000t
LOW STEEL FRAME OBH	(11)	40,000t
LOW STEEL FRAME OBH	(12)	40,000t
LOW STEEL FRAME OBH	(13)	40,000t
LOW STEEL FRAME OBH	(14)	40,000t
TOTAL EXISTING STORAGE		705,800t

PROPOSED SITE STORAGE		
LOW STEEL FRAME OBH (TEMPORARY)	(91)	22,000t
LOW STEEL FRAME OBH (TEMPORARY)	(92)	22,000t
LOW STEEL FRAME OBH (TEMPORARY)	(93)	22,000t
LOW STEEL FRAME OBH (TEMPORARY)	(94)	22,000t
LOW STEEL FRAME OBH (TEMPORARY)	(95)	22,000t
LOW STEEL FRAME OBH (TEMPORARY)	(96)	22,000t
LOW STEEL FRAME OBH (TEMPORARY)	(97)	22,000t
LOW STEEL FRAME OBH (TEMPORARY)	(98)	28,500t
LOW STEEL FRAME OBH (TEMPORARY)	(99)	32,500t
TOTAL PROPOSED STORAGE		215,000t

HATCHING LEGEND

AREA OF NEW WORKS 142,600 m^2

CHECK PRINT
DATE 19.06.18

CHK'D BY	DATE
B/DRAFT	DATE

PRELIMINARY ISSUE
DO NOT USE FOR CONSTRUCTION
DATE 19.06.18

1:2000 @ A1 / 1:4000 @ A3 — 0 20 40 60 80 100 120 140 160 180 200 m

CBHGROUP

CBH GROUP HEAD OFFICE
30 DELHI STREET
WEST PERTH
W.A. 6005
PH (08) 9237 9600
FAX (08) 9322 3942

DO NOT SCALE FROM THIS DRAWING - ASK !!!

REF DRG No.	REFERENCE DRAWING TITLE
-	-

REV	DATE	REVISIONS	BY	CHK'D	APP'D
-		ISSUED AS CHECK PRINT AND FOR REVIEW			

SCALE 1:2000
NORTH POINT

DESIGNED		
DES. CHECK		
DRAWN	P. Forrest	18.06.18
CHECKED		
APPROVED		

DRAWING TITLE
HARVEST READINESS PLANNING
200,000t ADDITIONAL STORAGE
EARTHWORKS
CONCEPT PLAN

SITE	MERREDIN
SHEET SIZE	A1
PROJECT	2018 HARVEST READINESS
DRAWING NO	2018-438-0060
REV.	A